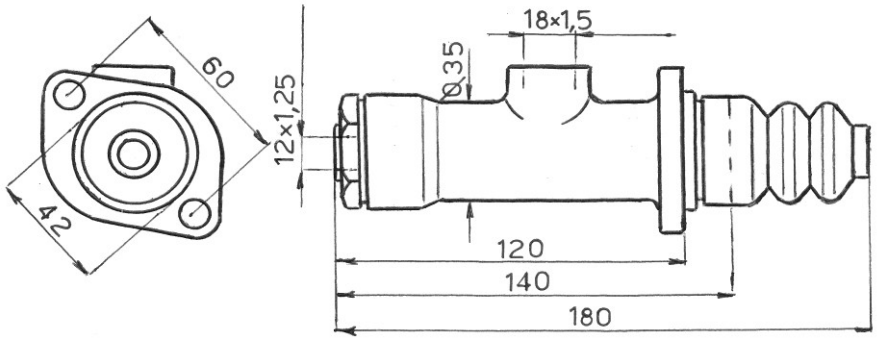

Ebac Code	Original Code	Brand	Description	
BBT100.853	2864000500	Fiori	Truck Mixer	Dot
		Cesab	Forklift	
			All Applications	
BBT100.8530			All Applications	M.Oil

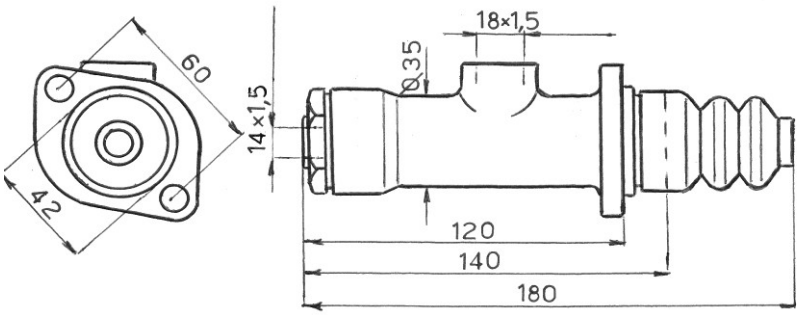

BBT100.854		Heden	All Applications	M.Oil
BBT100.8540			All Applications	Dot

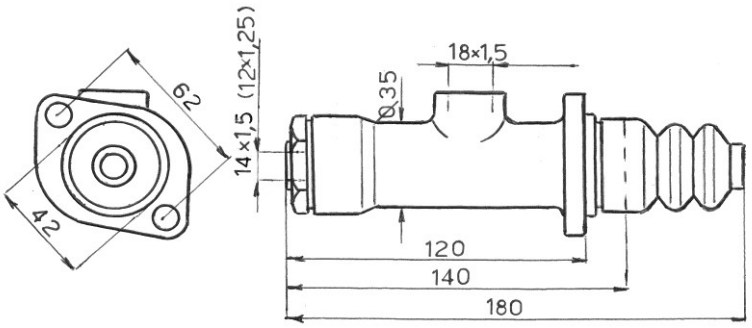

BBT100.855			All Applications	M. Oil
BBT100.8550			All Applications	Dot
				01 pag 00

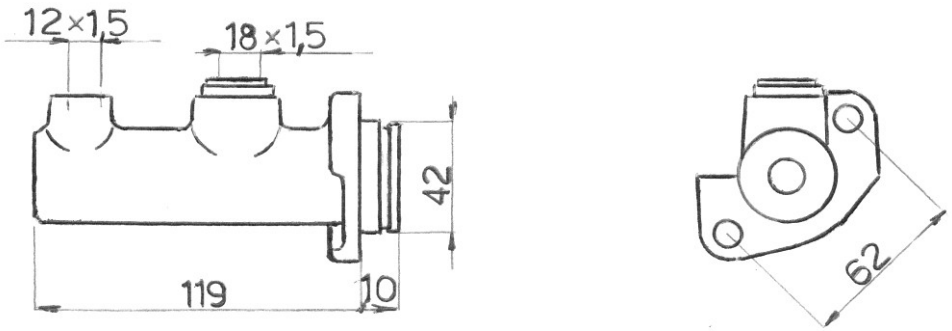

Ebac Code	Original Code	Brand	Description
BBV592.904	.044839	Merlo	Brake

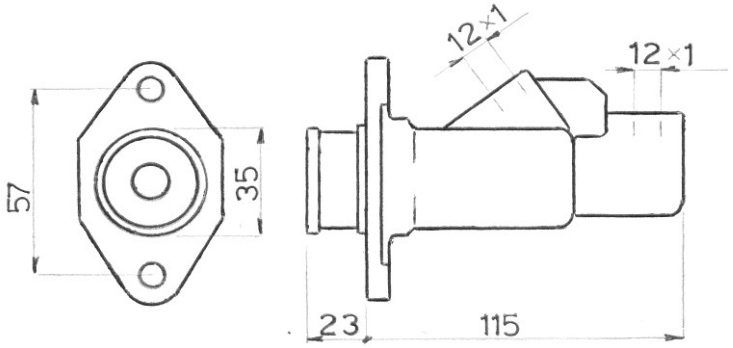

BBT78.817		Manitou	Brake

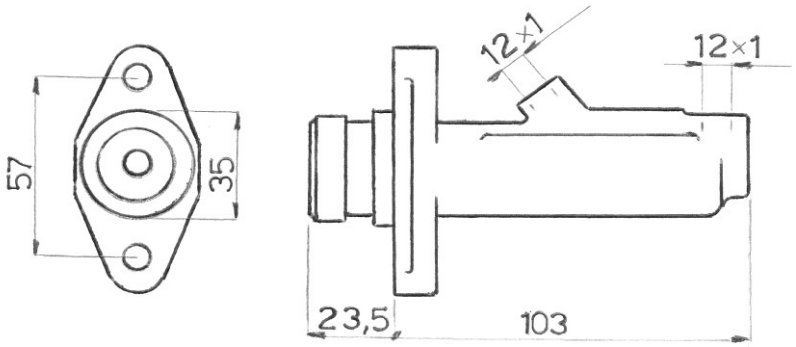

BBT34.812			Brake Master Cylinder Dot
			01 pag 01

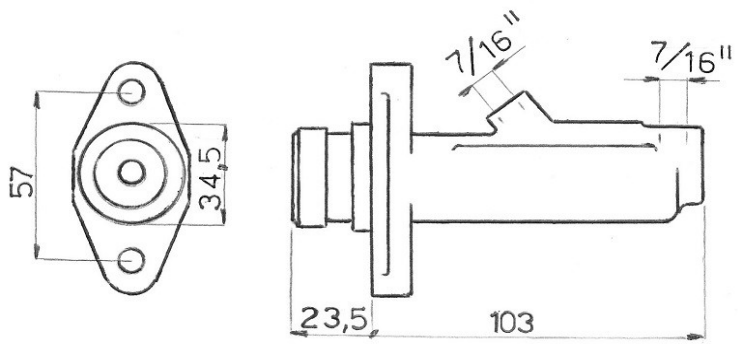

Ebac Code	Original Code	Brand	Description
BBJ34.8121	15 / 106100	JCB	Brake master cylinder Om
		MF	

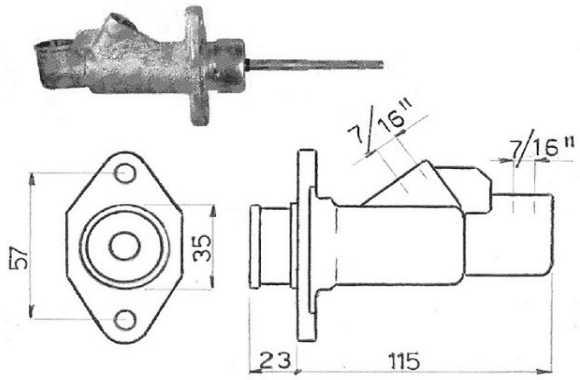

BBM100.817		MF	Brake master cylinder Om

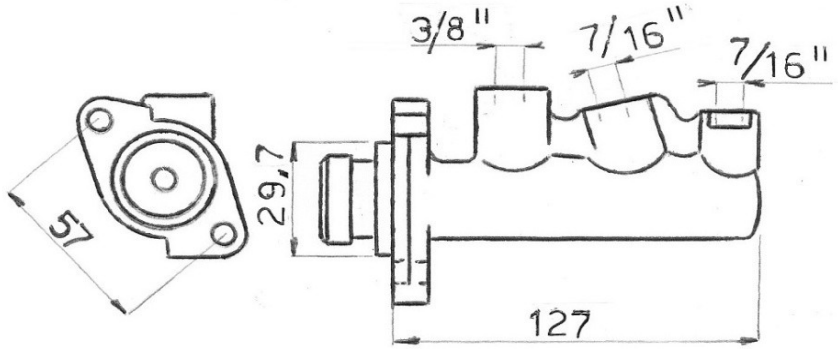

BBJ34.8141	15 / 920389	JCB	Brake master cylinder Om
		MF	
			01 pag 01.1

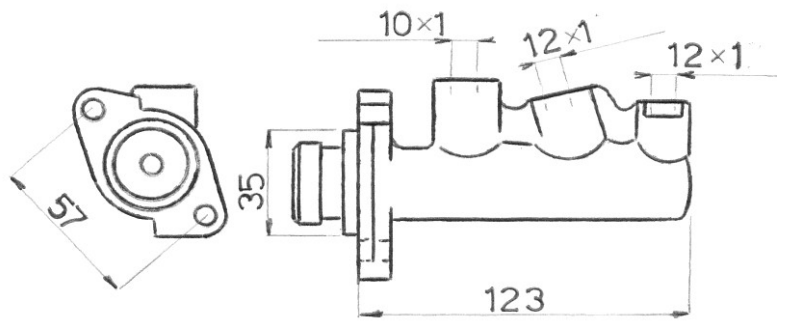

Ebac Code	Original Code	Brand	Description
BBT34.814			Brake
		Valtra	Tract
		Valmet	Tract

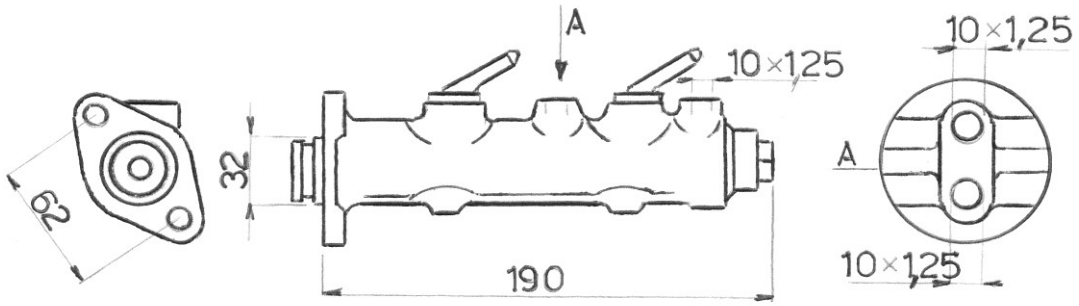

BBV34.809		Dumec	Dumper - Mixer - Fork lift

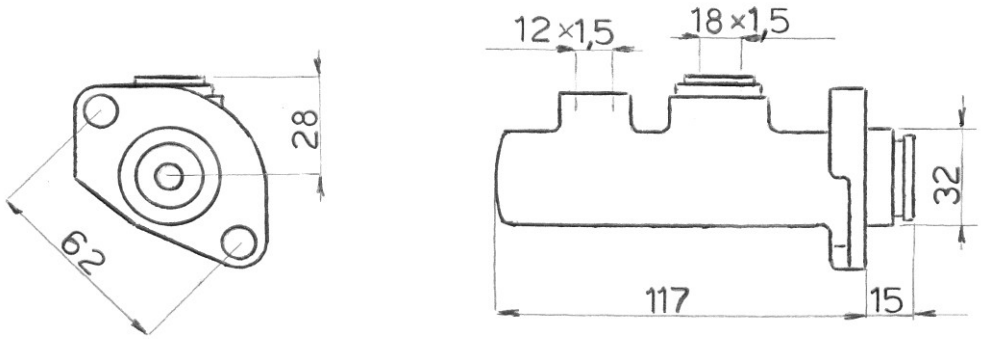

BBV34.905	BFC2102	Dieci	Telelift - Dumper	Om
	376036	Fiori	Dumper - Mixer	Om
				01 pag 02

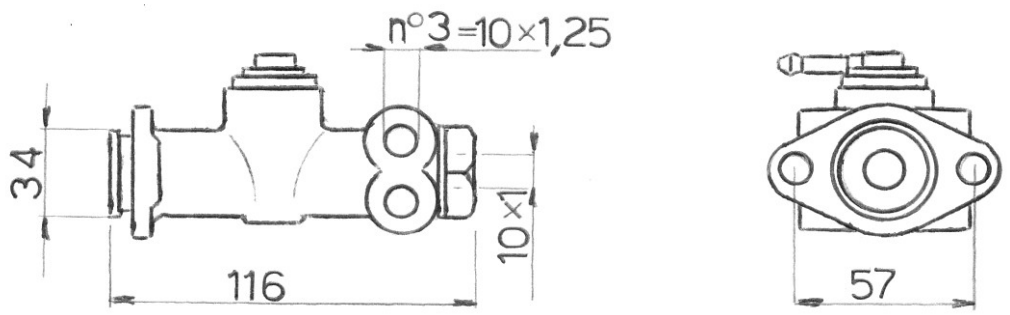

Ebac Code	Original Code	Brand	Description
BBV34.906			Fork lift

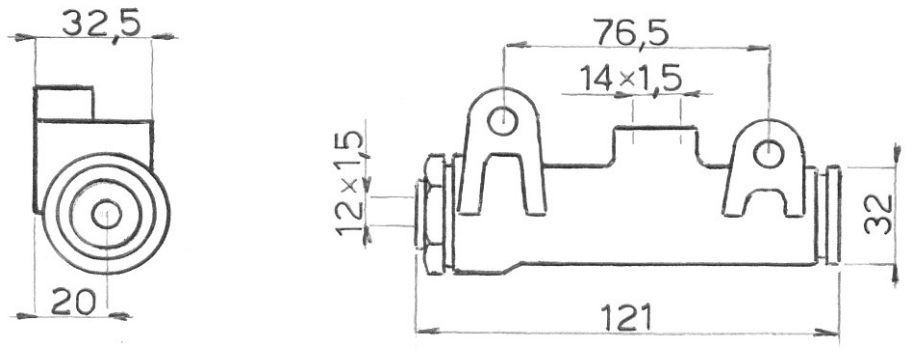

BBV34.915	.03794041	Messersi	Dumper
		Fiori	Dumper

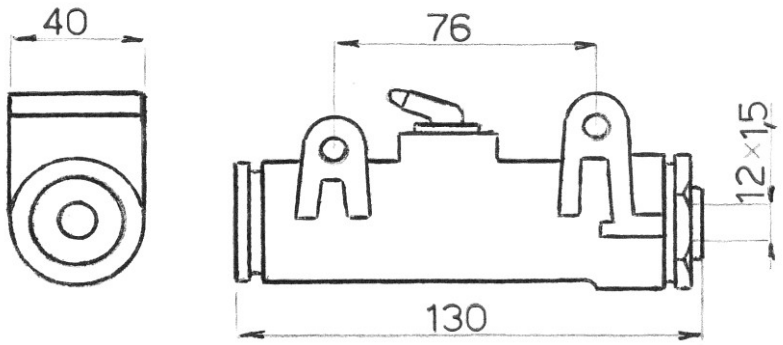

BBT34.916		Silla	Dumper
		Messersi	Dumper
			01 pag 03

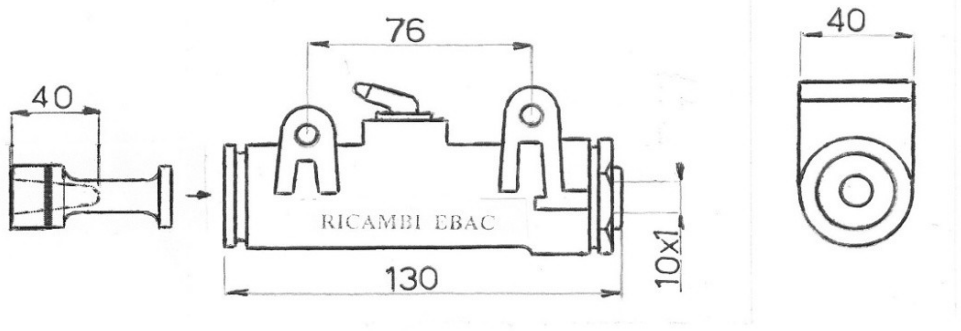

Ebac Code	Original Code	Brand	Description
BBV100.0012			Fork lift Om
BBV100.0013		Goldoni	Tractor Dot
			All Applications

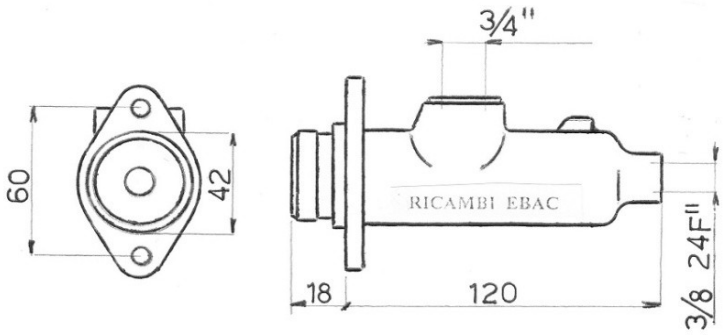

BBL78.100	BFC2126	Dieci	Dumper

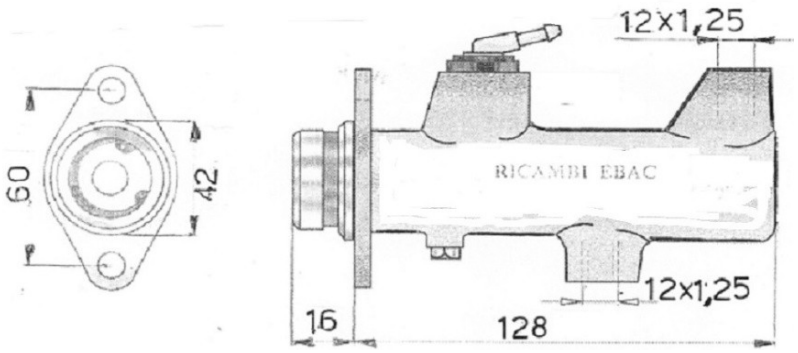

BBT34.900		FAI	All Applications
			01 pag 03.1

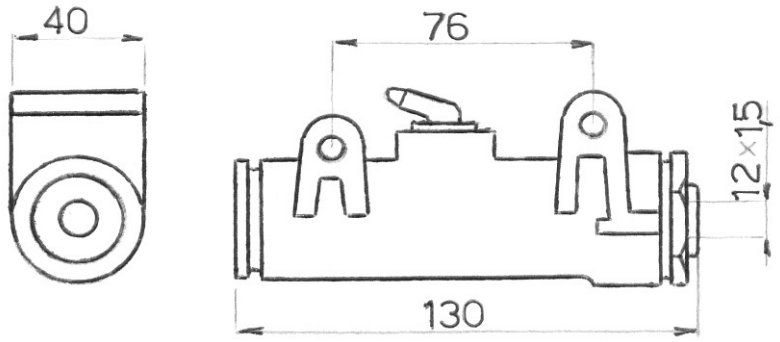

Ebac Code	Original Code	Brand	Description	
BBV100.001	388115	Fiori	Mixer - Dumper	Om
BBV100.0011	BFC2123	Dieci	Dumper	Dot
BBV100.001	BFC2204	Dieci	Dumper	Om
BBV100.0011		Messersi	Dumper	Dot

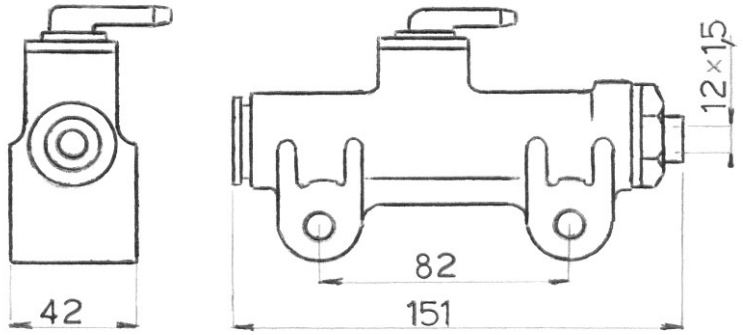

BBT100.802	BFC2123.1	Dieci	Dumper
		Gecom	Dumper

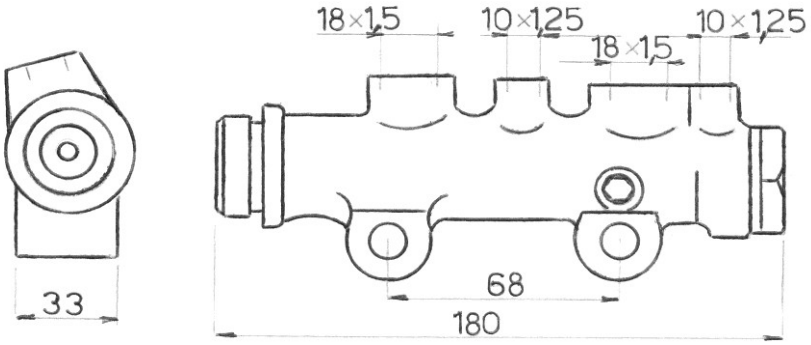

BB100.052	BFC2124	Dieci	Mixer - PD 1600 - Dumper
		Benfra	
		OM	Fork lift
			01 pag 04

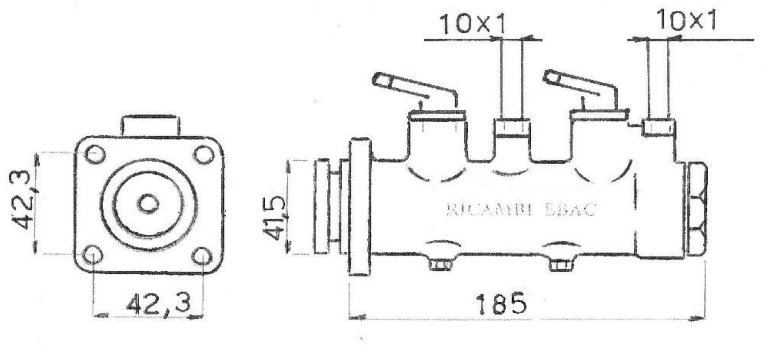

Ebac Code	Original Code	Brand	Description
BBT100.803E	.043264 - 014652K -	Merlo	Mixer - Telescopic Handler
	.060472		

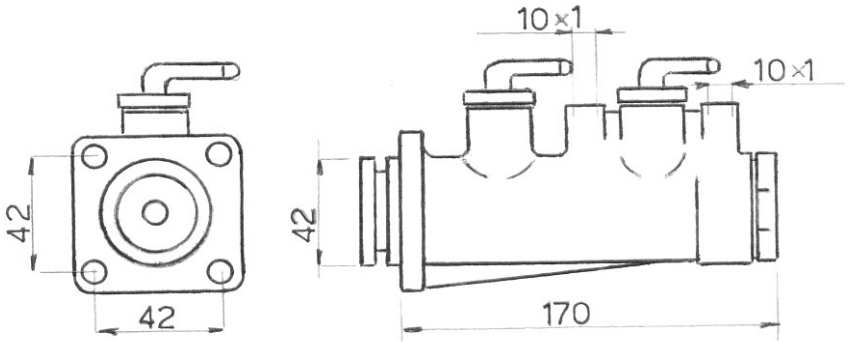

BBT100.804	.046338 - 043264	Merlo	Mixer - Telescopic Handler
	.014652K - 060742		

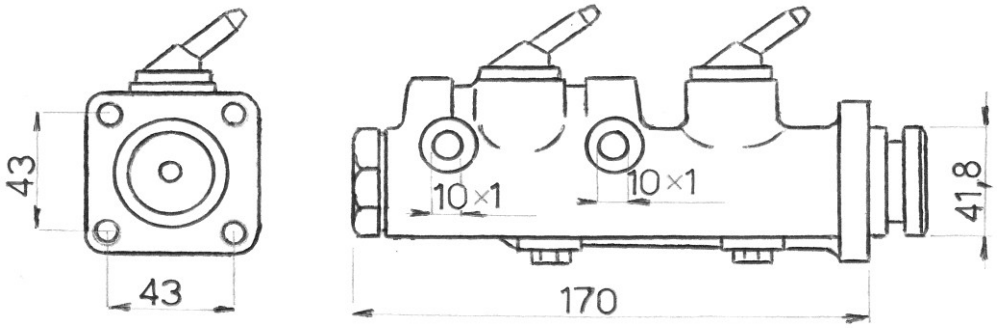

BBM100.816	.060473	Merlo	Mixer - Telescopic Handler wB
			01 pag 05

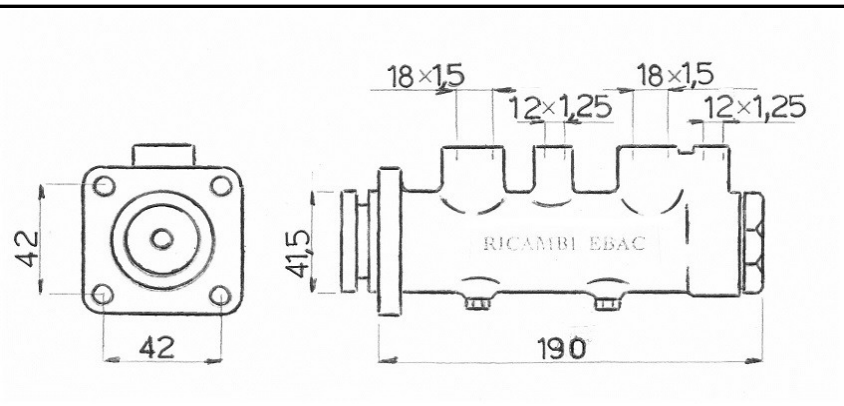

Ebac Code	Original Code	Brand	Description
BBT100.8055	.0300010000	Carmix	Mixer Dot

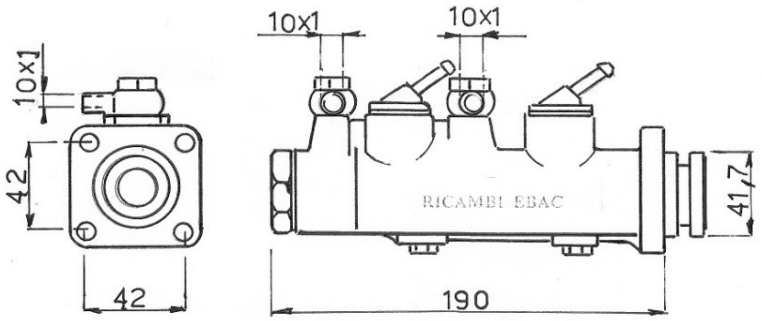

BBM100.8161	.060473A	Merlo	Mixer - Telescopic Handler Dot

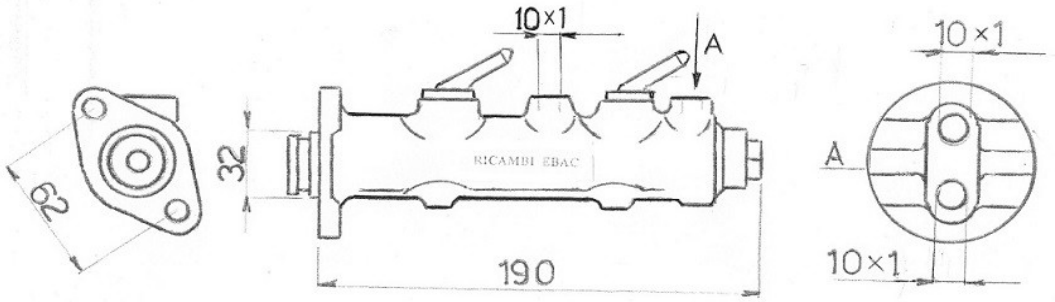

BBV34.8090	BFC2101	Dieci	Dumper - Mixer - Fork lift
			01 pag 05.1

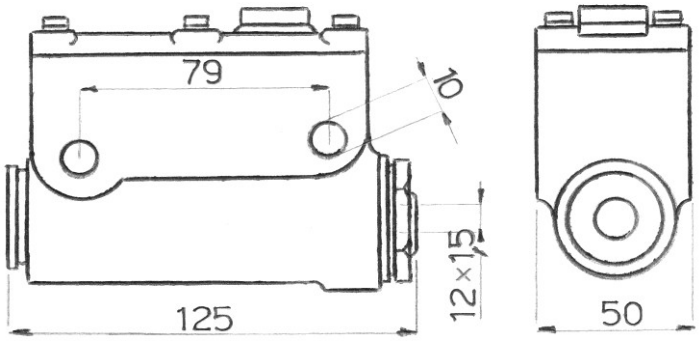

Ebac Code	Original Code	Brand	Description
BBT100.806	286000700	Fiori	Dumper

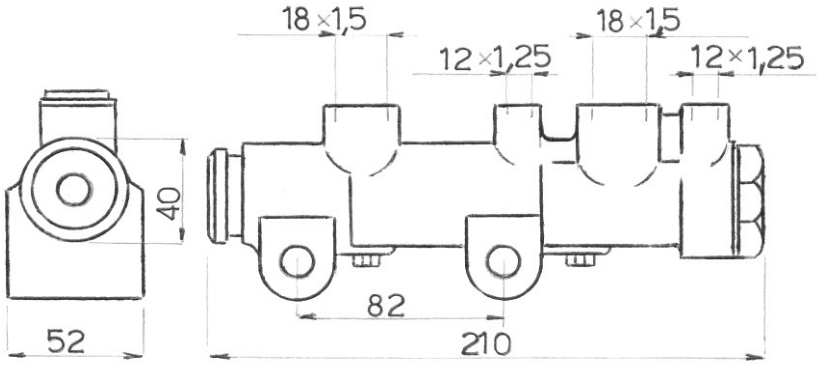

BBV100.807	2000.01.00	Dumec	Mixer - Dumper	Om
	BFC2200	Dieci	Dumper	
	373092001	Fiori	Mixer - Dumper	
	60000045	Piccini	Dumper	

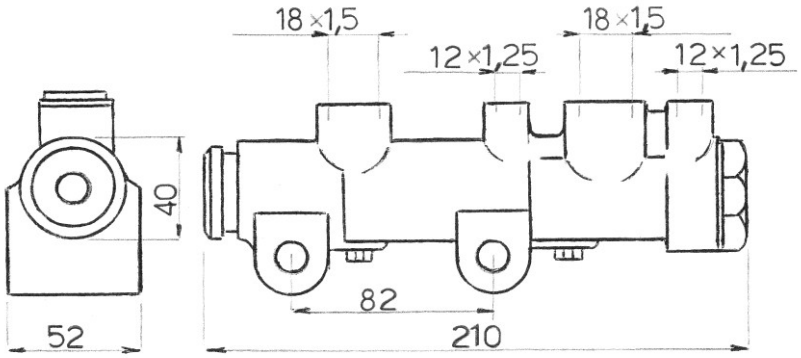

BBV100.808	1500.01.00	Dumec	Mixer - Dumper
	BFC2124 - BFC2125	Dieci	Dumper
			01 pag 06

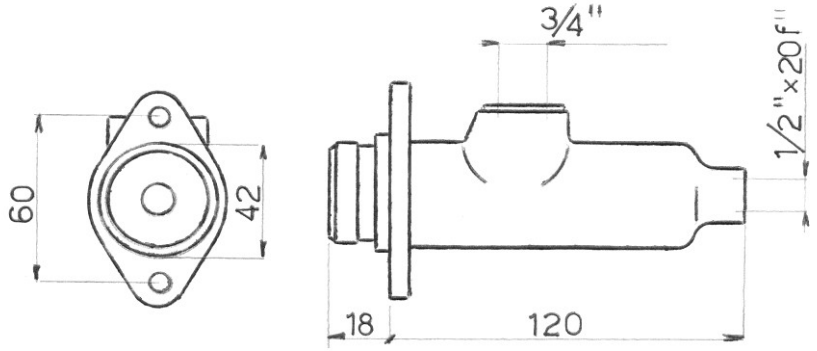

Ebac Code	Original Code	Brand	Description
BBT100.809		Sambron	Brake

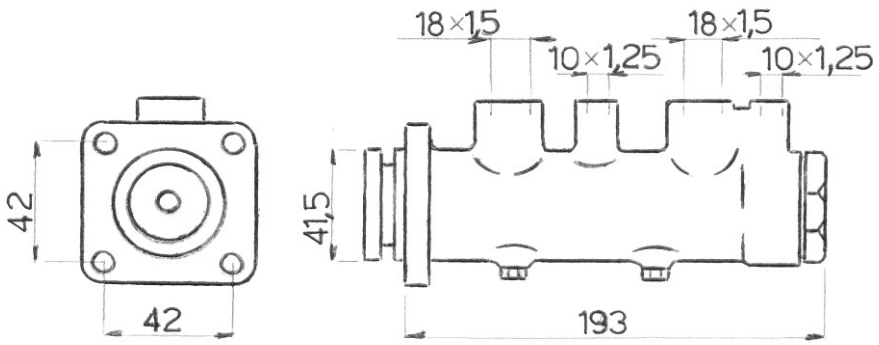

BBT100.805		PGS	Fork lift

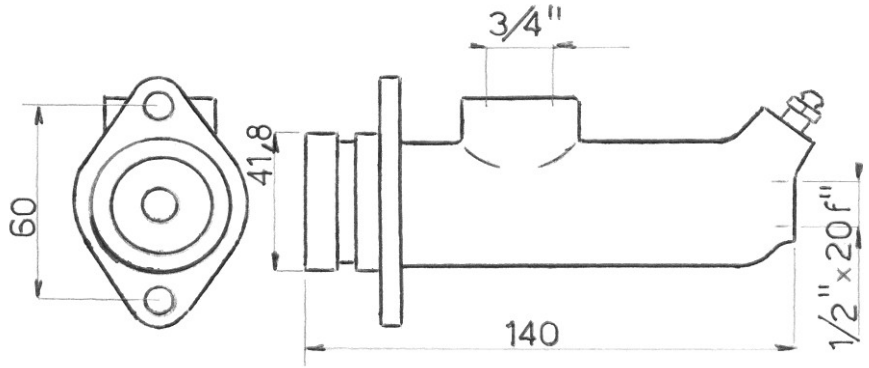

BBT118.813		Manitou	Brake
			01 pag 07

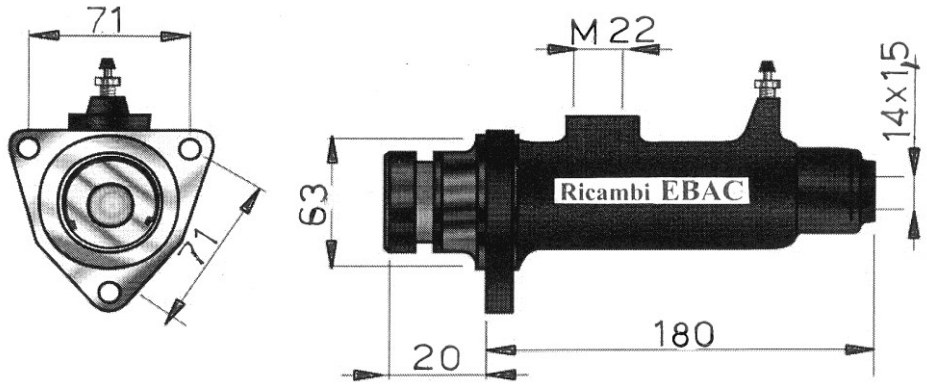

Ebac Code	Original Code	Brand	Description
BBT138.209		International	Dot

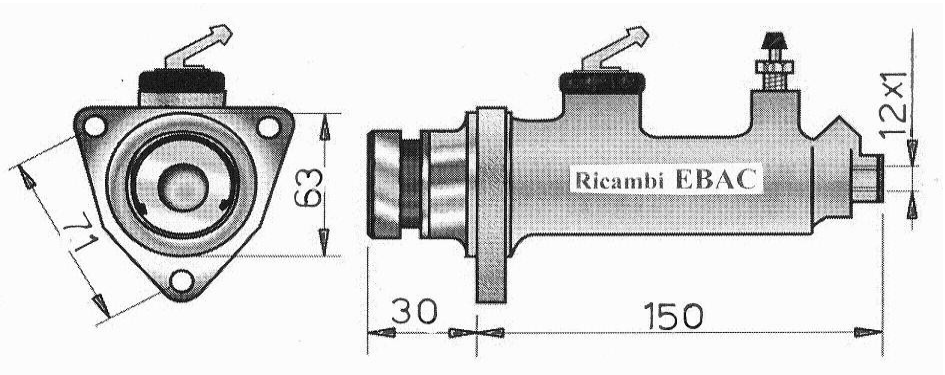

BBT138.208		Hydrema	Dot

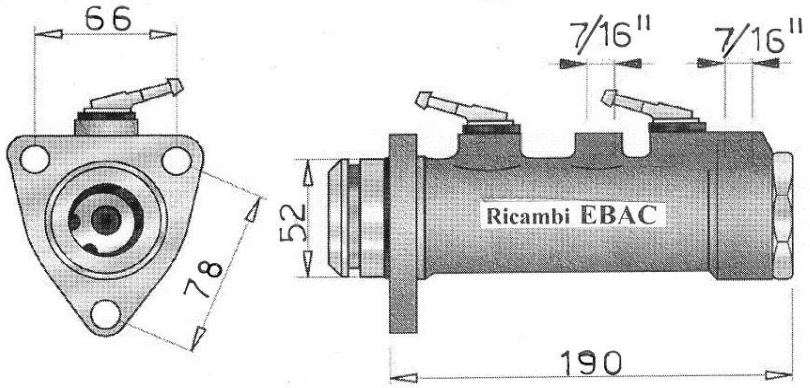

BBT112.210		JCB	Om
			01 pag 07.1

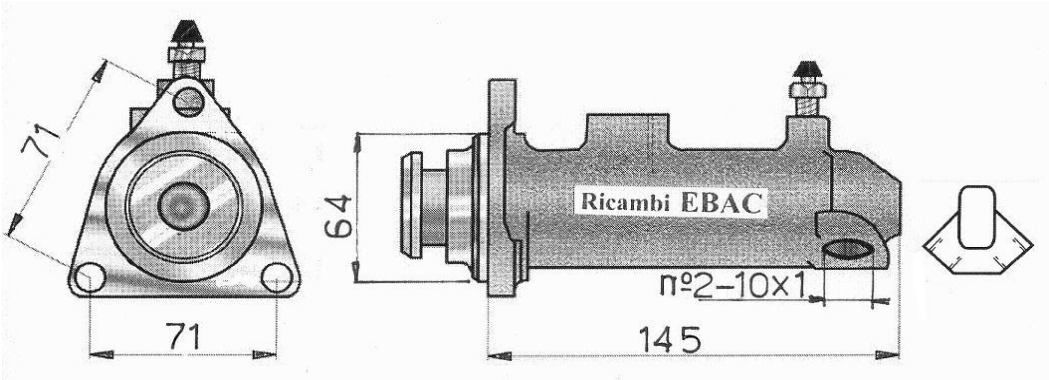

Ebac Code	Original Code	Brand	Description
BBT112.206		O & K	Dot

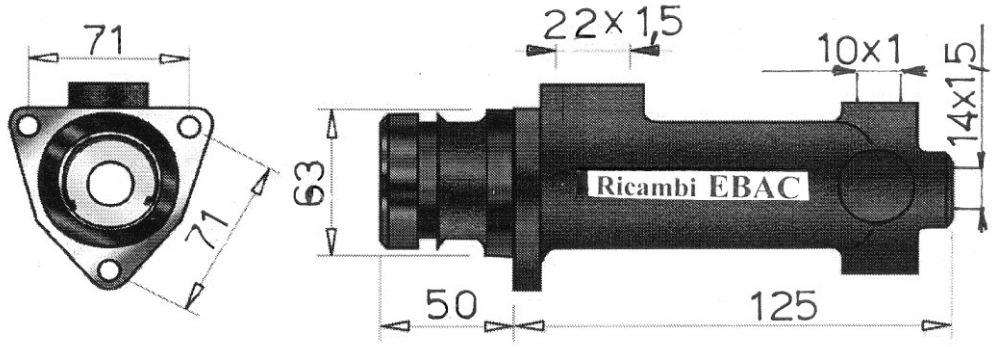

BBT112.212		Hanomag	Om

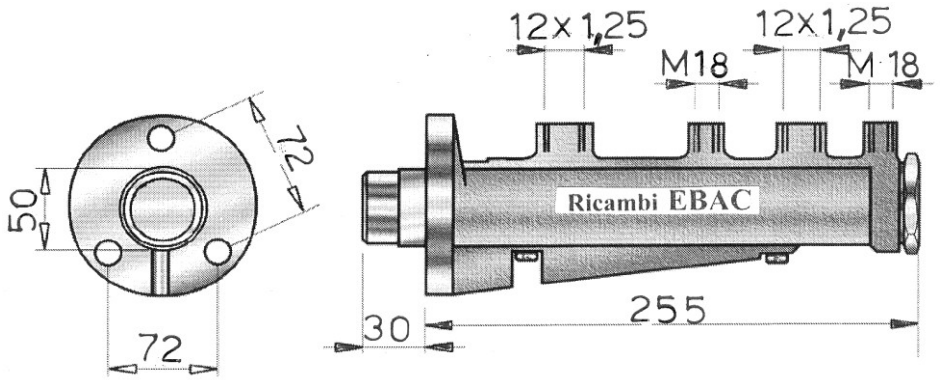

BBT112.211		Venieri	Dot
			01 pag 07.2

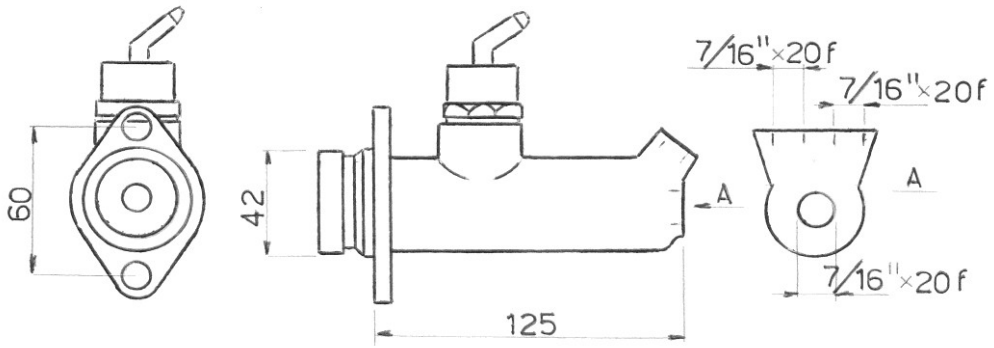

Ebac Code	Original Code	Brand	Description
BBT118.807		Manitou	Brake

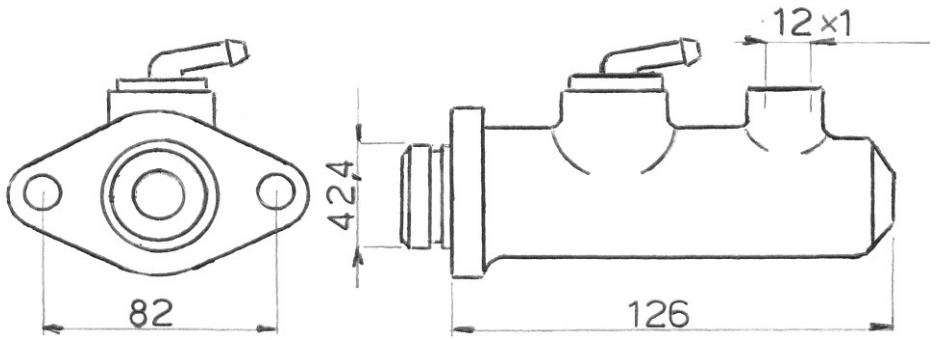

BBT118.815		JCB	Om

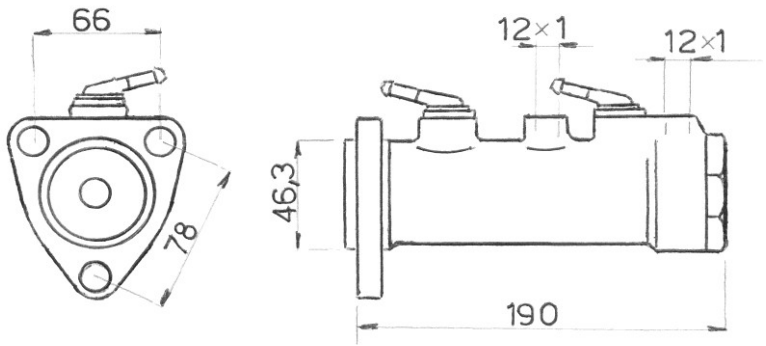

BBT115.808		Terex	Telescopic Handler Om
			01 pag 08

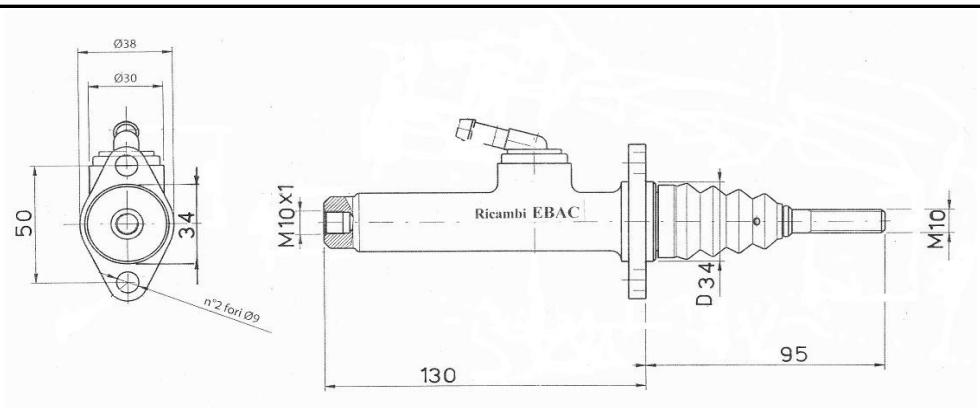

Ebac Code	Original Code	Brand	Description
BBV58.126	694573.0	Claas	Tract. Agri Dot

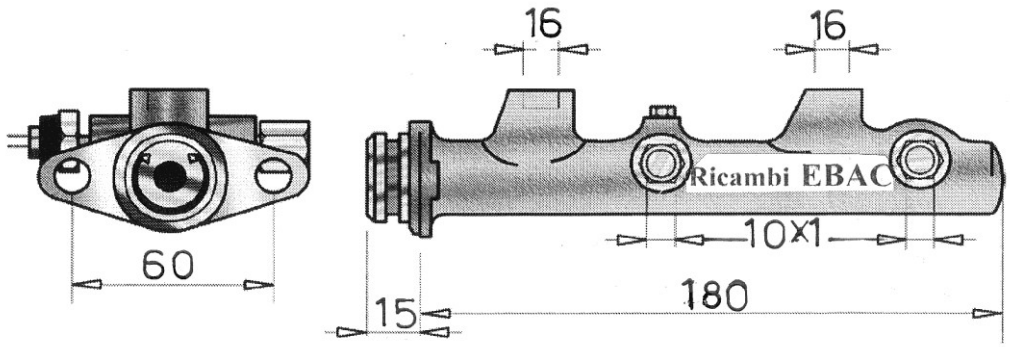

BBT78.200		Hanomag	Dot

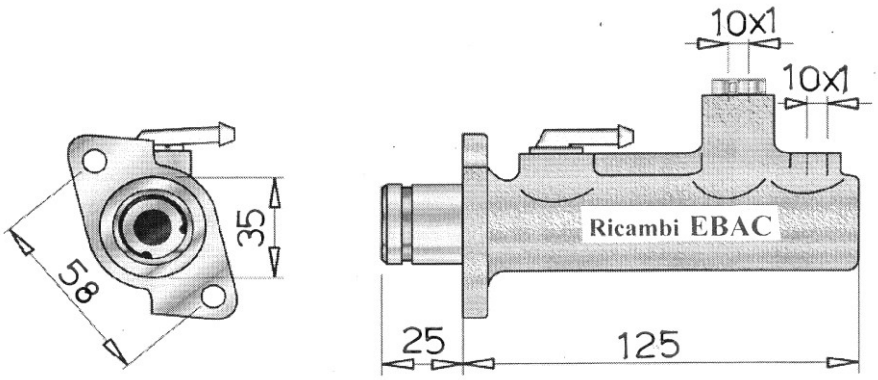

BBT78.202		John Deere	
			01 pag 08.1

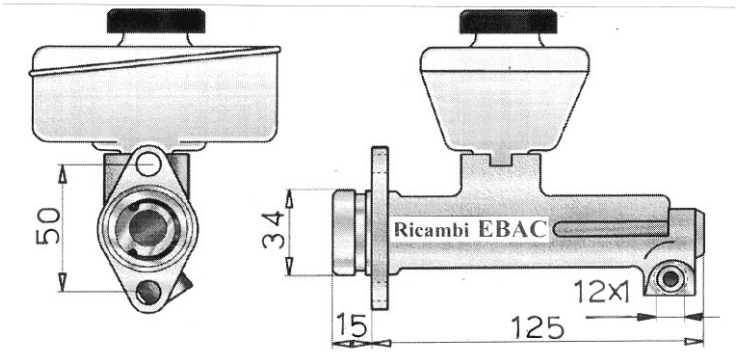

Ebac Code	Original Code	Brand	Description
BBT78.203		Fiat-Agri	Dot

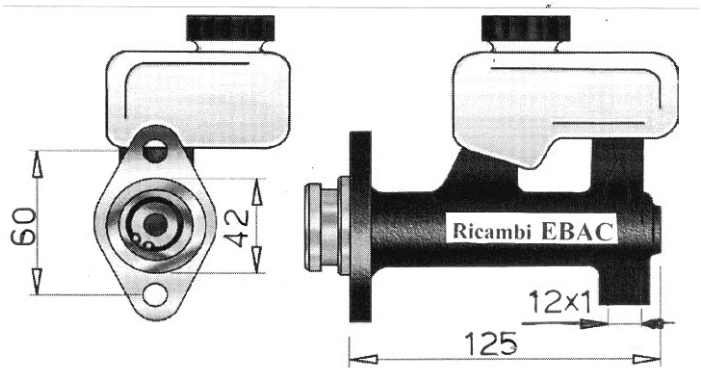

BBT78.201		Fendt	Dot

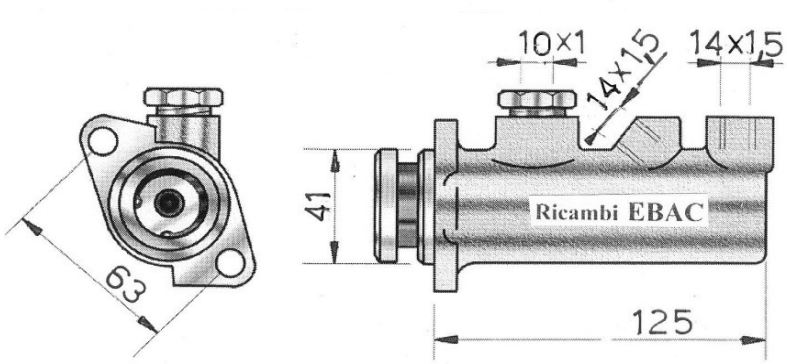

BBT100.205		Landini	Argotractors Om
			01 pag 08.2

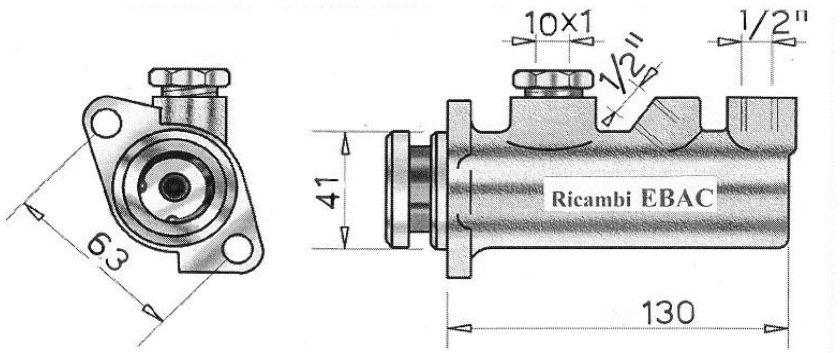

Ebac Code	Original Code	Brand	Description
BBT100.204		International	Dot

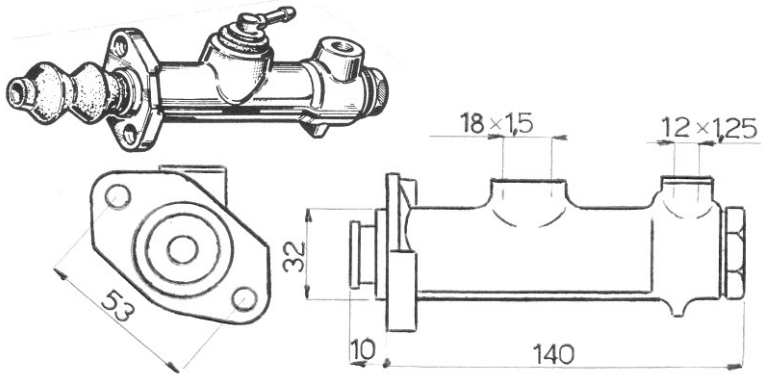

CA34.002		Merlo	All Application	Dot oil
		Carmix		
		Dieci		
CA34.003		Fiori	All Application	Min. oil
		Silla		

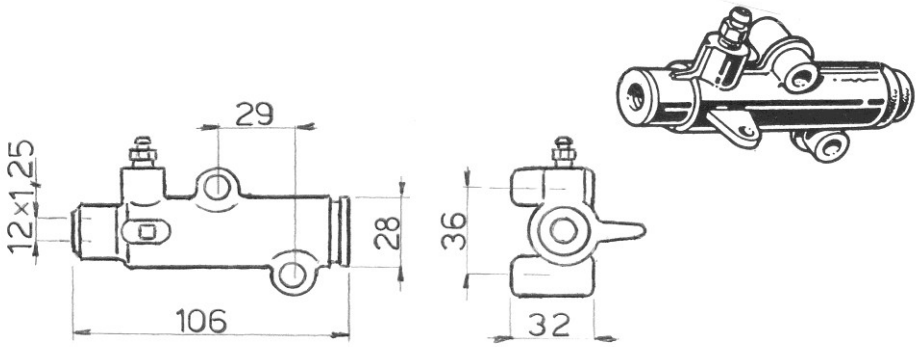

CB34.003	Dot		Merlo	With ring lock against expulsion
			Dieci	Con fermo anti espulsione
CB34.006	Min oil		Carmix	
			Silla	
			Dumec	01 pag 08.3

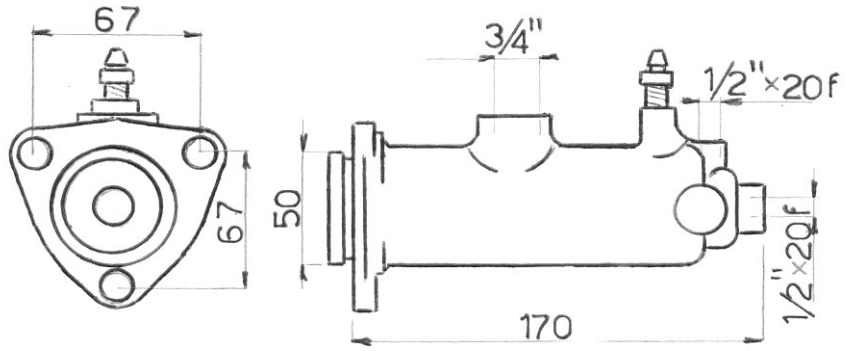

Ebac Code	Original Code	Brand	Description
BBT115.811		Sambron	

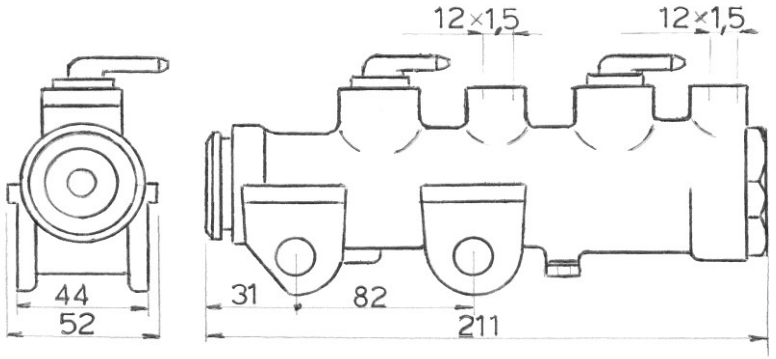

BBV114.810	1200009012	Silla	Mixer - Dumper	Om
	2000.02.00	Dumec	Mixer - Dumper	
	BFC2205	Dieci	Mixer - Dumper	
	369117	Fiori	Mixer - Dumper	
BBV114.8100			All Applications	Dot

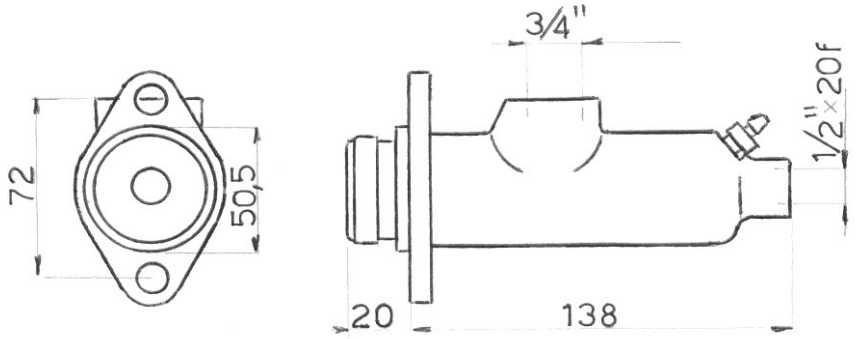

BBT114.819		Manitou	Brake	Om
				01 pag 09

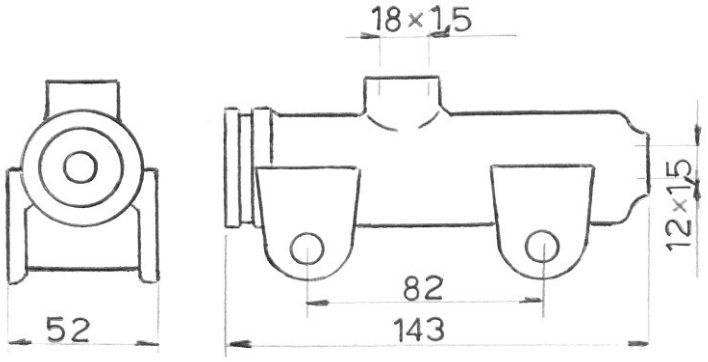

Ebac Code	Original Code	Brand	Description
BBT114.801	BFC2123.2	Dieci	Dumper 800 -1000
		Cesab	Fork lift

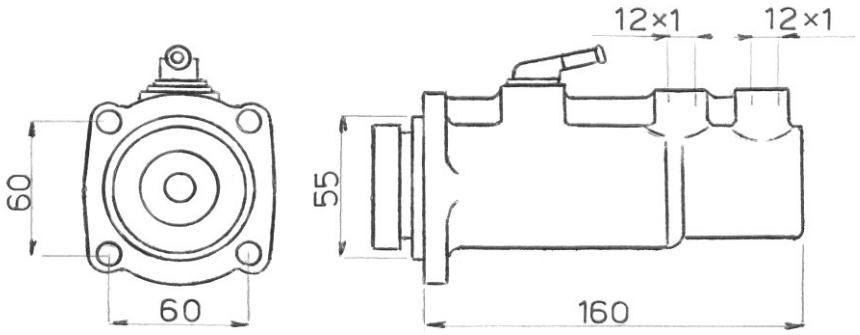

BBS1015.01		Sambron	

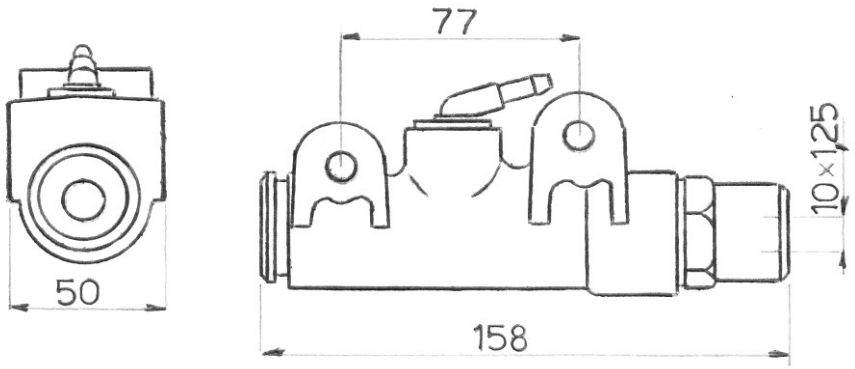

BBV2015.903		Fiori	Dumper
		Silla	Dumper
			01 pag 10

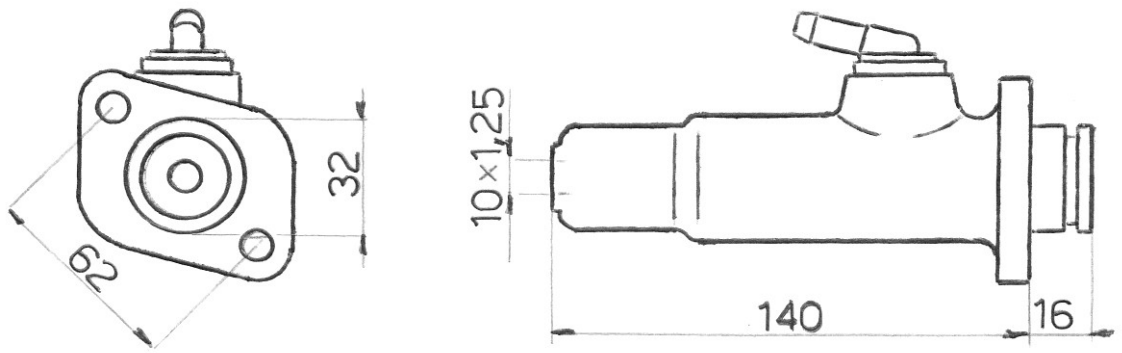

Ebac Code	Original Code	Brand	Description
BBV2015.9021	355475	Fiori	Dumper ABX

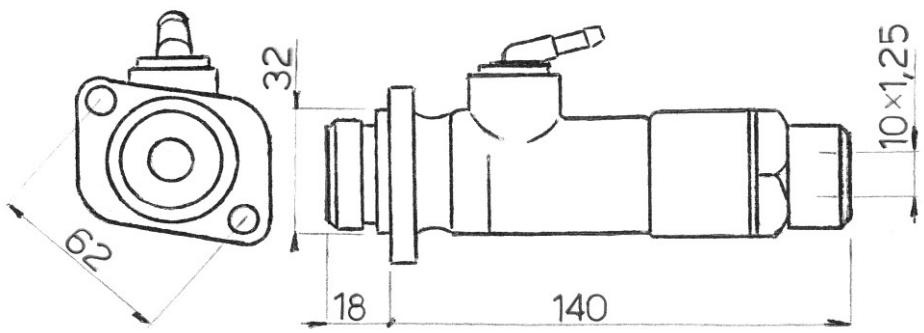

BBV2015.902	355475/A	Fiori	Dumper
		Terex	Brake

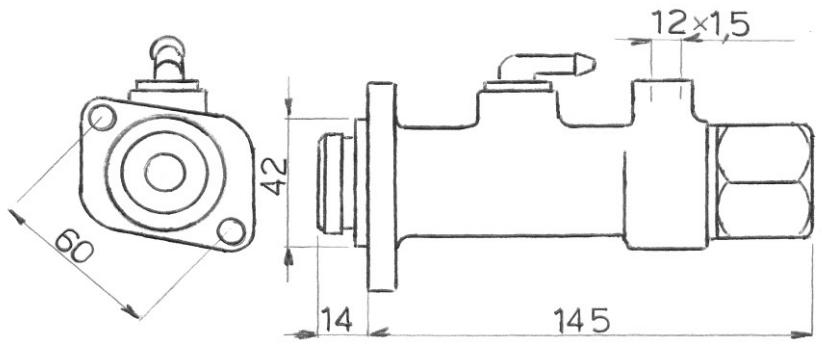

BSF2720.06			Fork Lift (Mont. Vert.)	Om
				01 pag 11

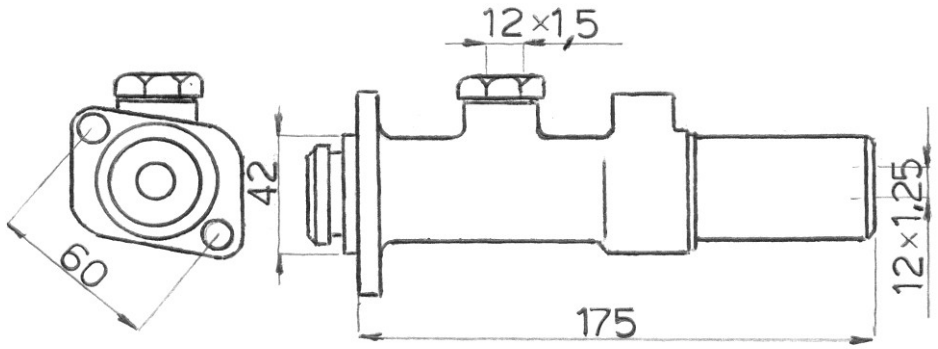

Ebac Code	Original Code	Brand	Description
BSF2215.07		Cesab	Fork Lift

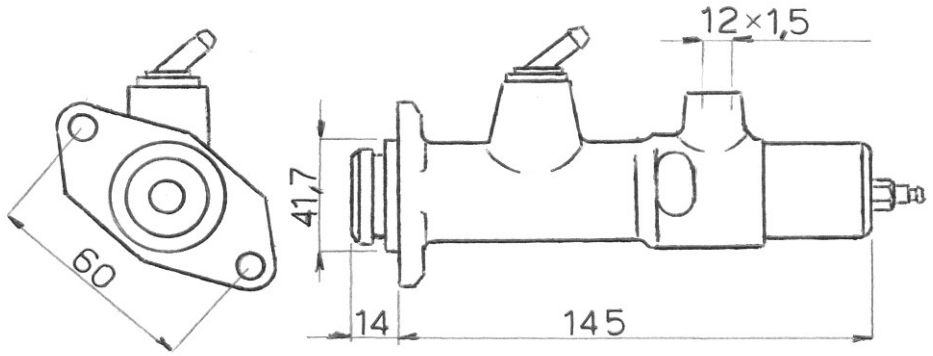

BSF2720.08		Manitou	Brake	Om

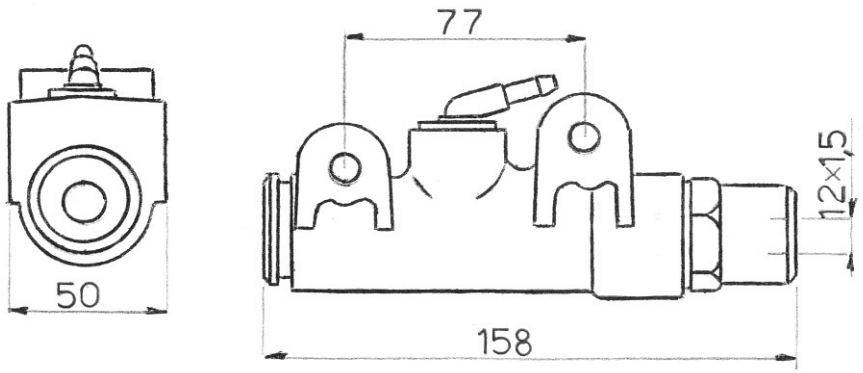

BBV2720.901		Fiori	Dumper	Dt/Om
		Terex	Dumper	
				01 pag 12

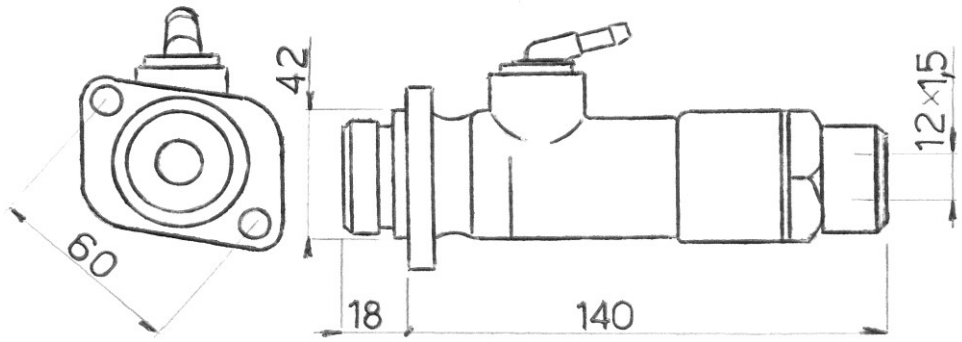

Ebac Code	Original Code	Brand	Description
BBV2720.812		Italmacch.	Dumper

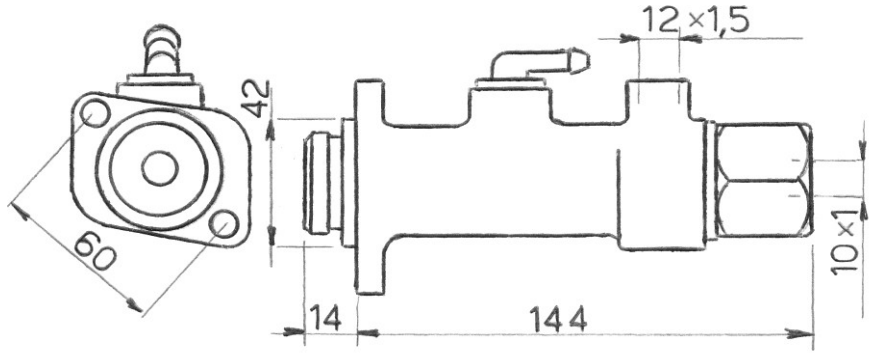

BSF2720.10		Merlo	Brake	Om
		FAI	Brake	Om

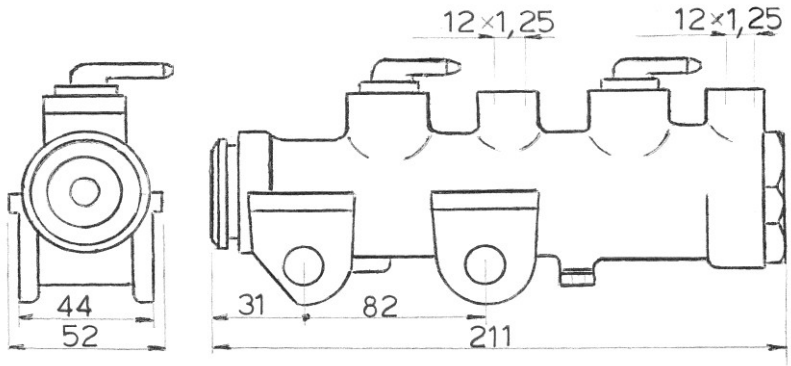

BBV3025.908		Italmacch.	Mixer - Dumper
			01 pag 13

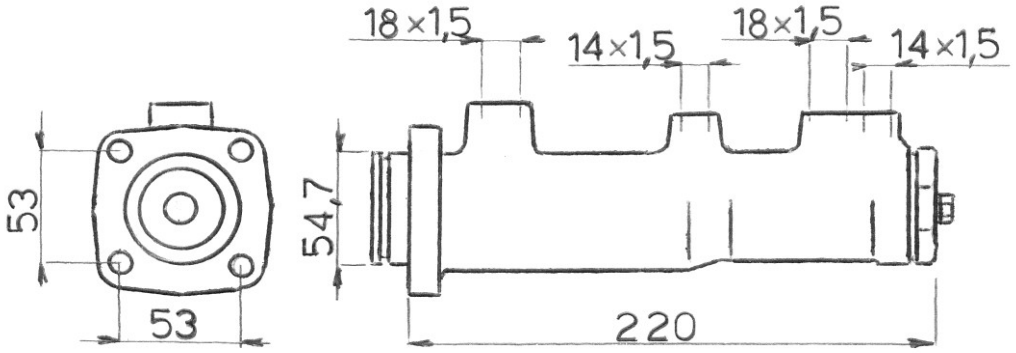

Ebac Code	Original Code	Brand	Description	
BSF3175.09	BFC2202	Dieci	Telescopic Handler	Om
		Fiori	Mixer	
		Benati	Brake	

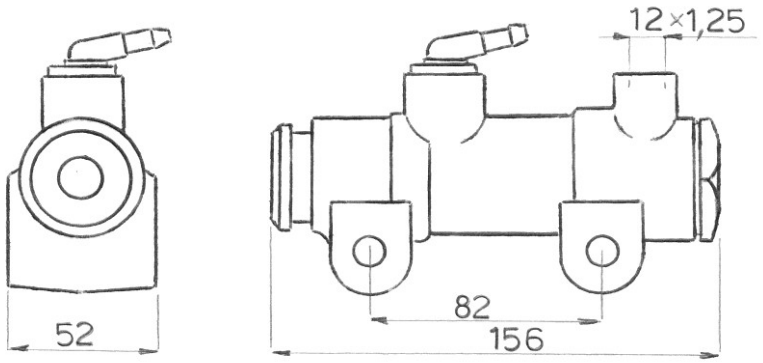

BBV3526.907		Dumec	Dumper
		Silla	Mixer - Dumper

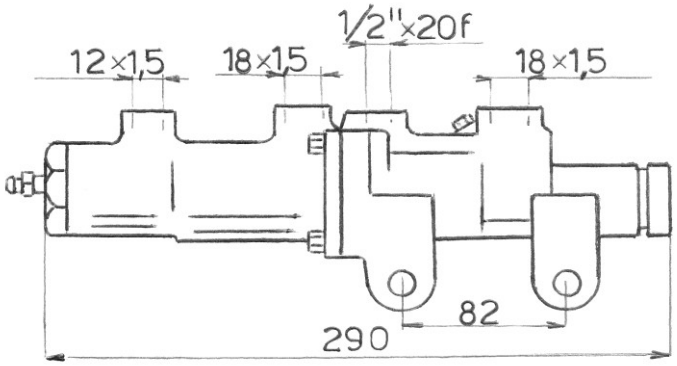

BSF1843.02	228686	Manitou	Telescopic Handler	Om
				01 pag 14

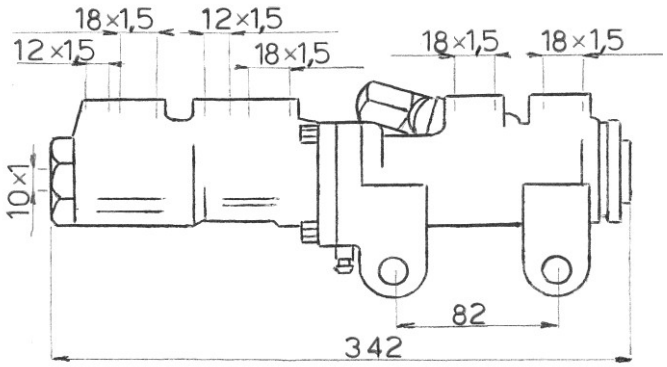

Ebac Code	Original Code	Brand	Description
BSF1843.13		Manitou	Brake
	3000.16.008	Silla	Mixer DB 2500 - DB3000

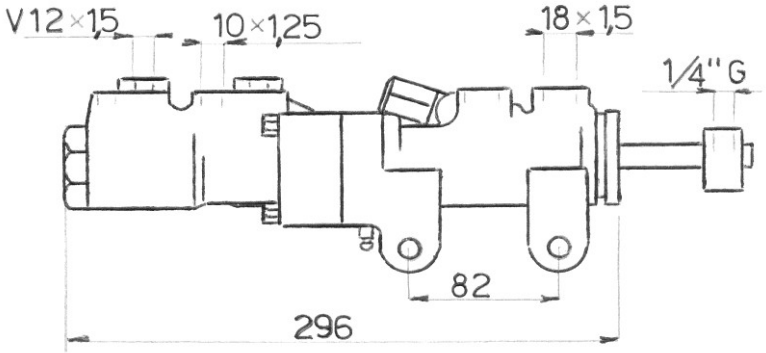

BSF185.01	BFC2119	Dieci	Telescopic Handler

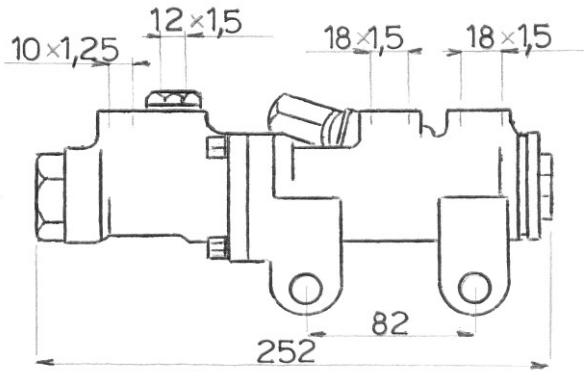

BSF190.11		Manitou	Telescopic Handler
			01 pag 15

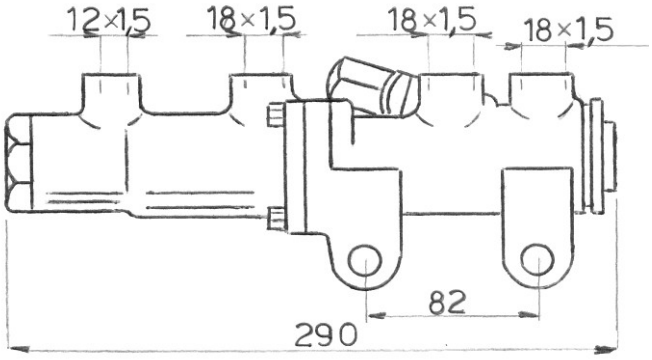

Ebac Code	Original Code	Brand	Description
BSF1944.04		Manitou	Telescopic Handler
		Dieci	Telescopic Handler

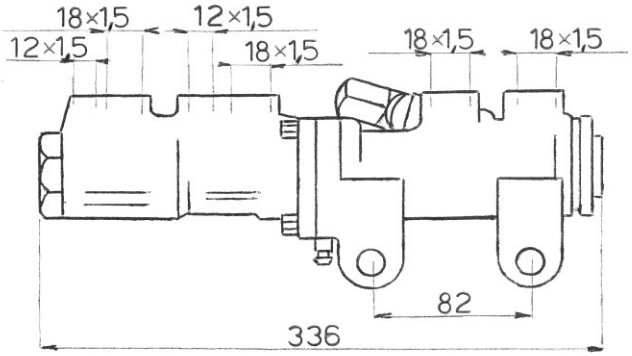

BSF2648.12		Fantuzzi	Port Lift
		Fiori	Mixer

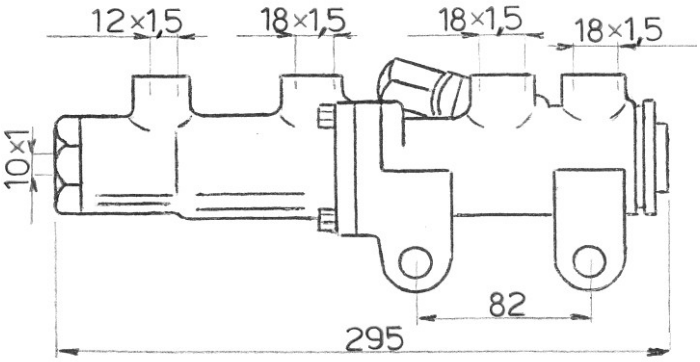

BSF2749.05		Manitou	Telescopic Handler
		Dieci	Telescopic Handler
			01 pag 16

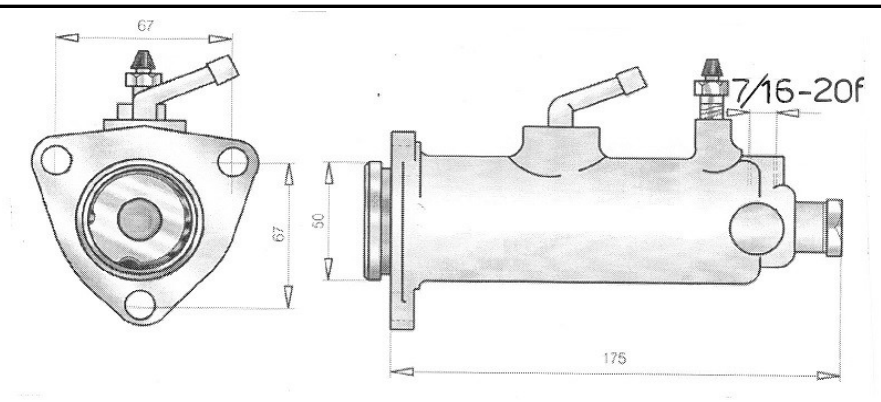

Ebac Code	Original Code	Brand	Description
BSMB932D 112		Sambron	Forklift Dot

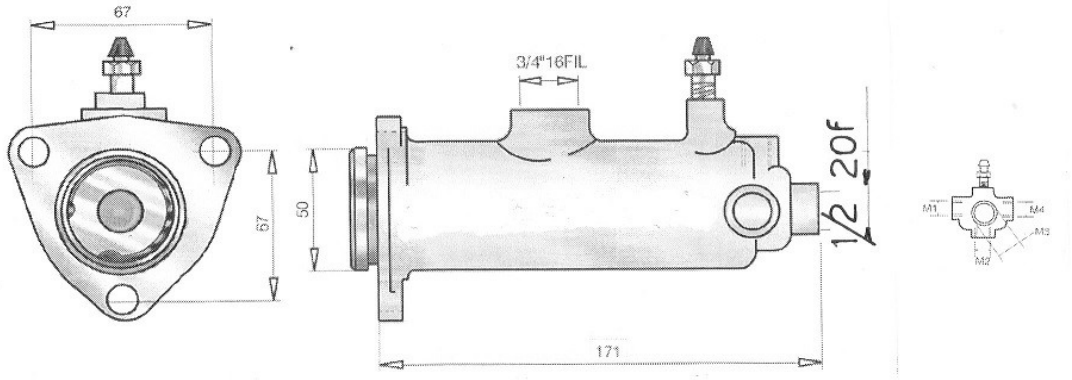

BSMB296D 112		Sambron	Forklift Dot
BSMB347M 112		Sambron	Forklift M.oil

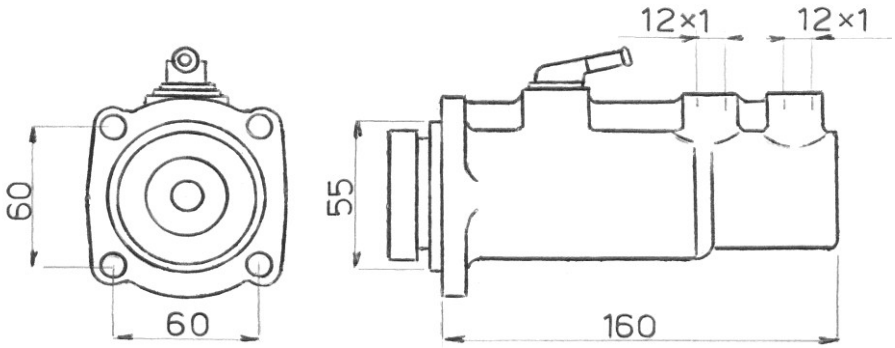

BSMB239M 100-112		Sambron	Forklift M.oil
			01 pag 17