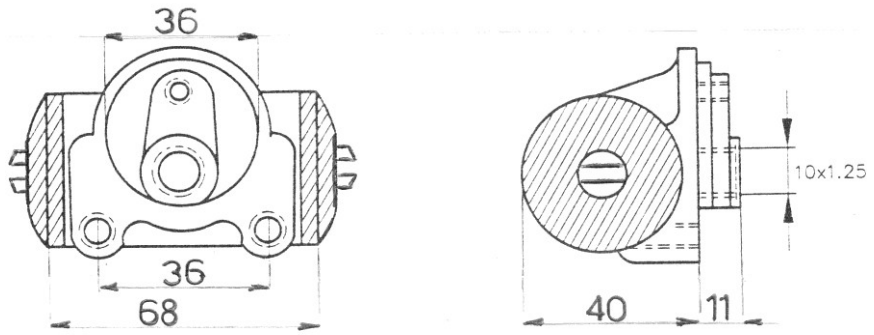

Ebac Code	Original Code	Brand	Description
BF118.001	BFM5001	Dieci	Dumper 800 - 1000 VT
	V0134	Silla	Dumper 1000 VT
		M4	

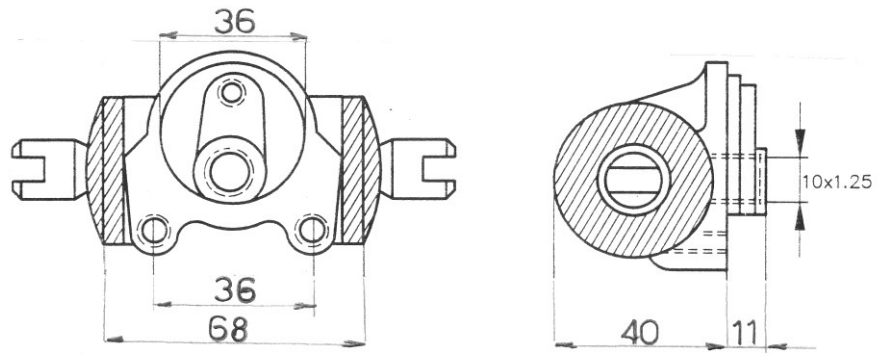

BF118.003	BFM5030	Dieci	Mixer DAB
		PGS	Fork Lift

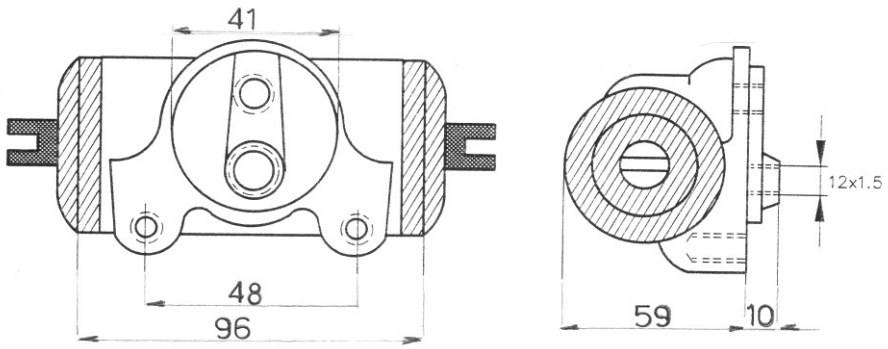

BF134.004	BFM5050	Dieci	Mixer DAB 3000
		Lugli	Fork Lift
			02 pag 01

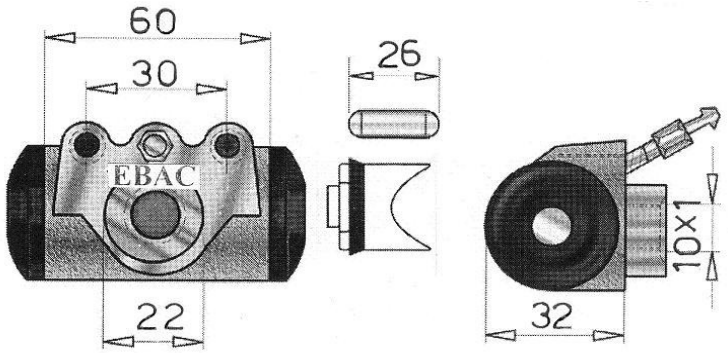

Ebac Code	Original Code	Brand	Description
BF78.200		M4	

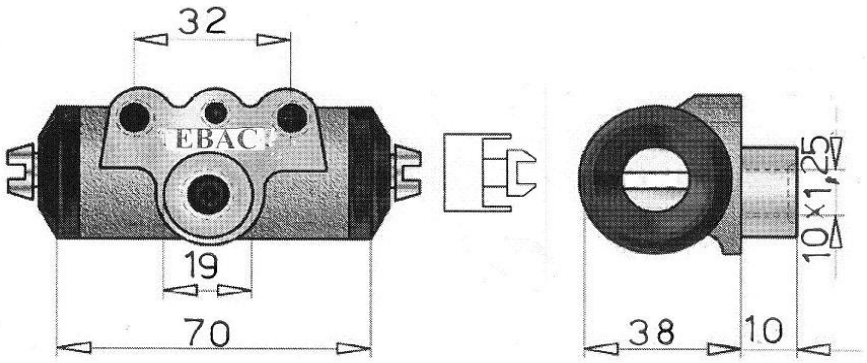

BF78.201		M4	

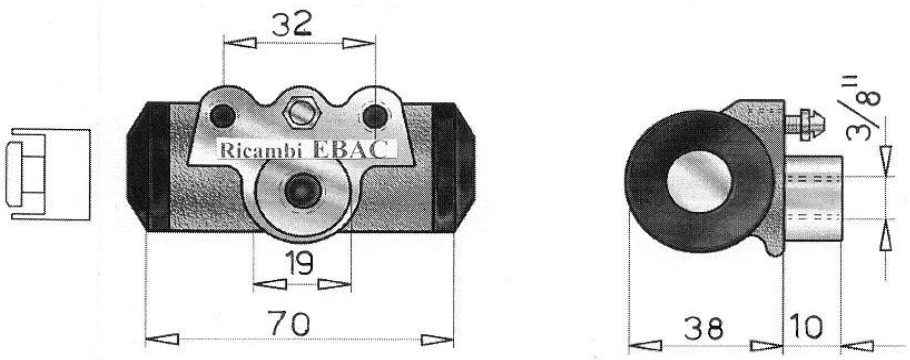

BF78.202			Forklift
			02 pag 01.1

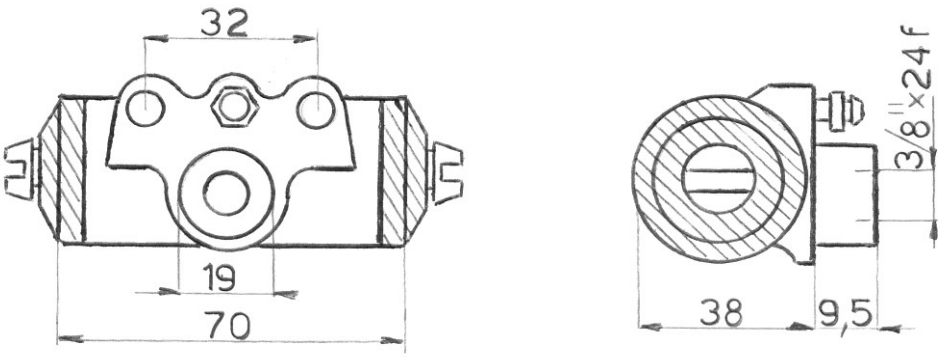

Ebac Code	Original Code	Brand	Description
BF100.01	2862000300	Fiori	Dumper 2T
BF78.203			Dumpers

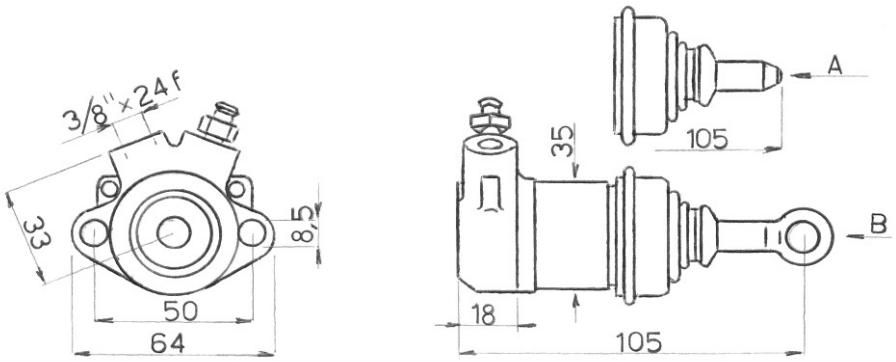

BF100.02	4970400003	Fiori	Mixer DB244

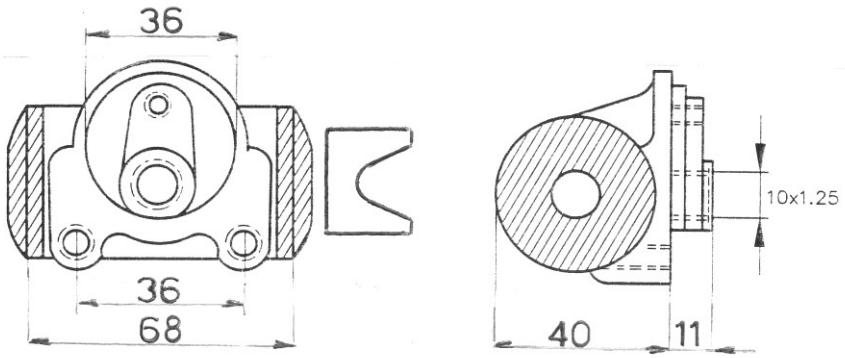

BF118.002		Messersi	Dumper 600 - 800
			02 pag 02

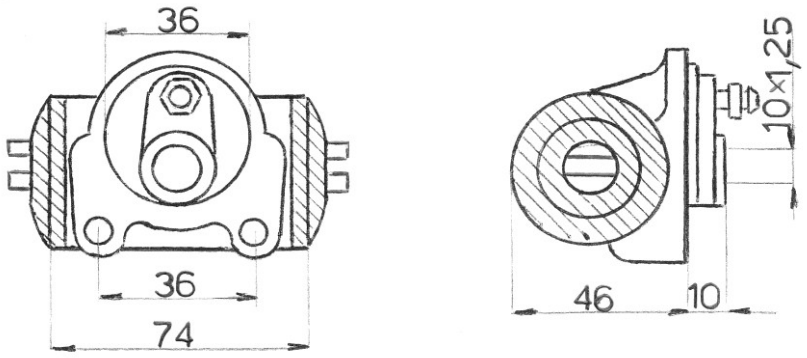

Ebac Code	Original Code	Brand	Description
BF114.01		Silla	Dumper

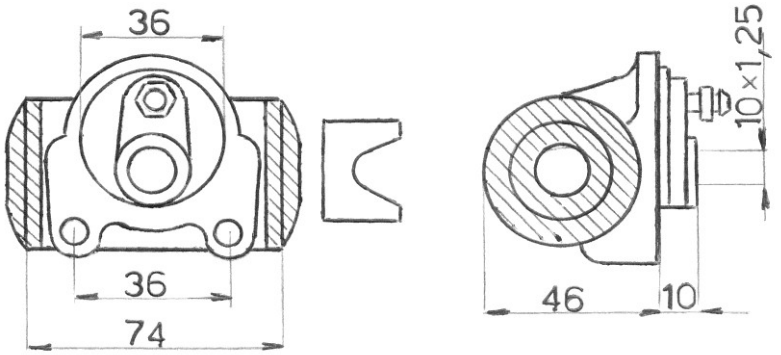

BF114.02			Fork Lift

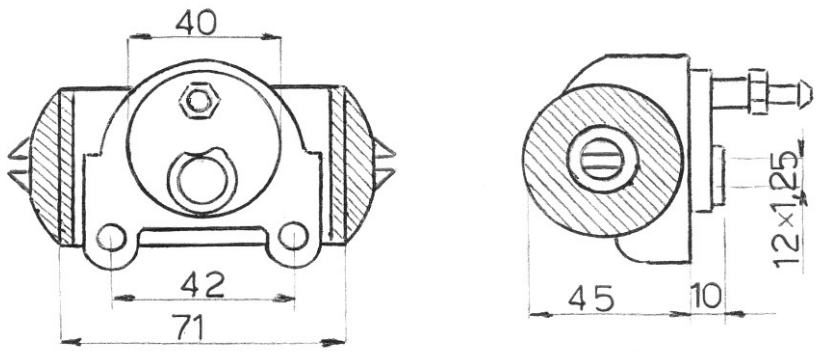

BF118.005		Sibicar	Fork Lift
			02 pag 03

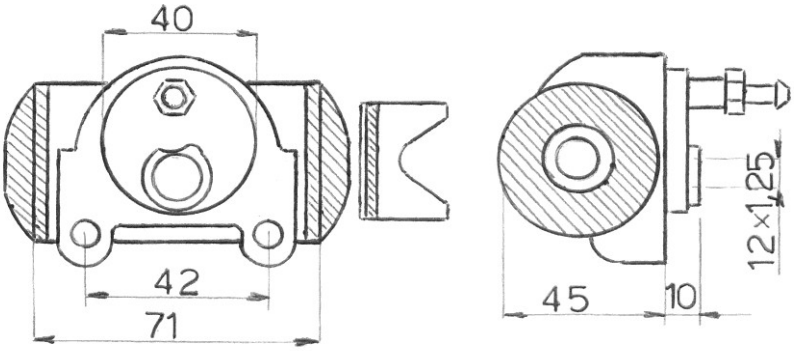

Ebac Code	Original Code	Brand	Description
BF118.006		Sibicar	Fork Lift

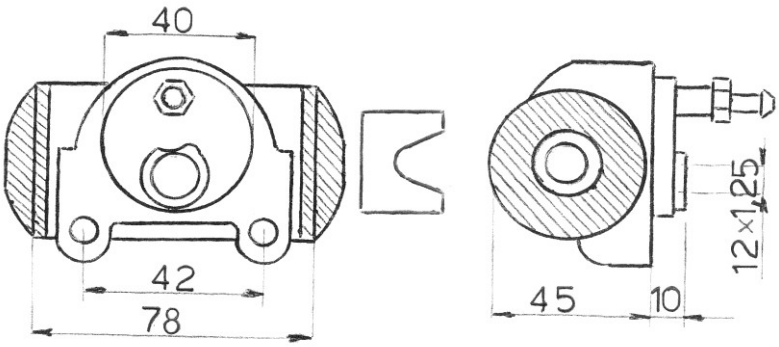

BF114.03			Fork Lift

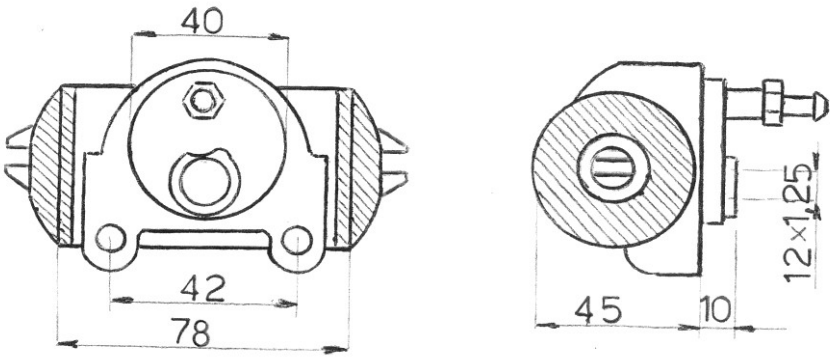

BF114.04			Fork Lift
			02 pag 04

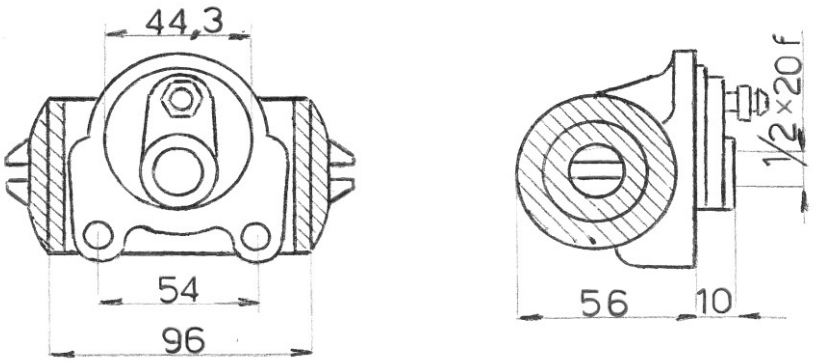

Ebac Code	Original Code	Brand	Description
BF15.001		Clark	Fork Lift
		Hyster	Fork Lift

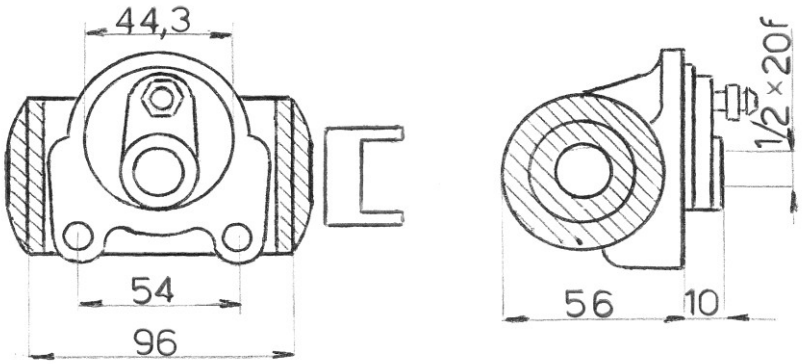

BF15.002		Clark	Fork Lift
		Hyster	Fork Lift

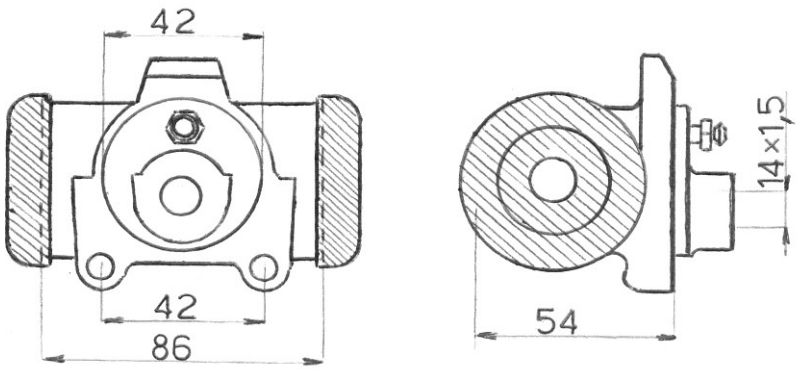

BF118.007		Comet	Mixer - Dumper
			02 pag 05

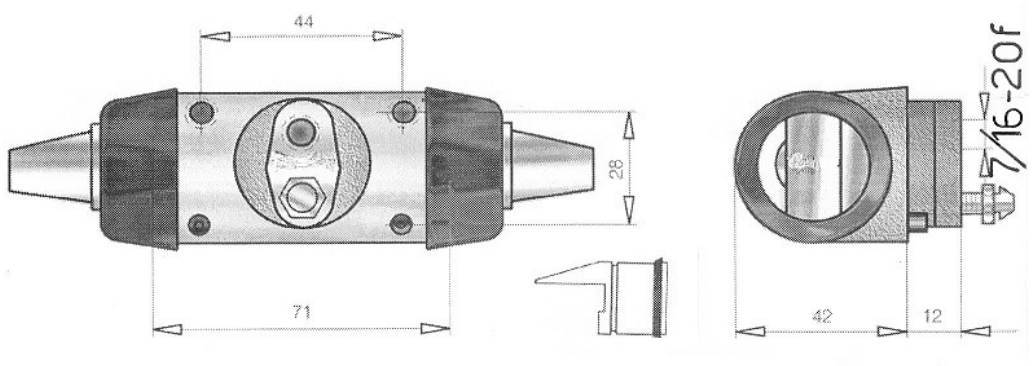

Ebac Code	Original Code	Brand	Description
CSMB125D 100		Sambron	Forklif Dot

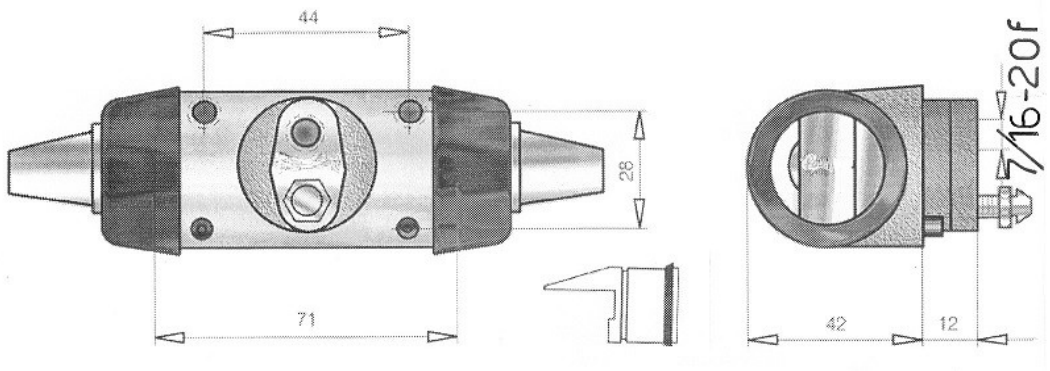

CSMB294M 100		Sambron	Forklift M.oil

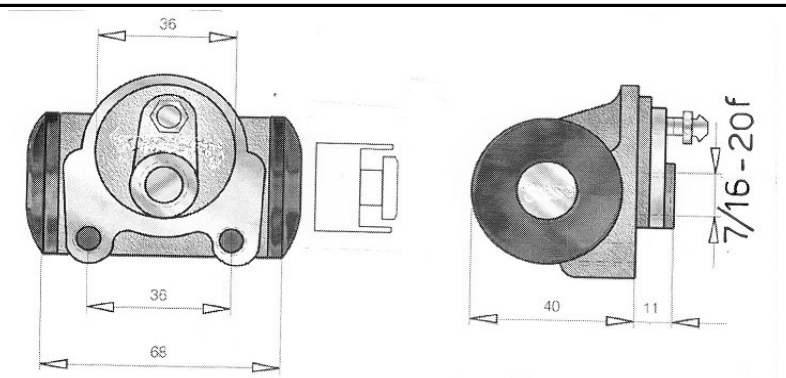

CSMB121D 118		Sambron	Forklift Dot
			02 pag 05.1

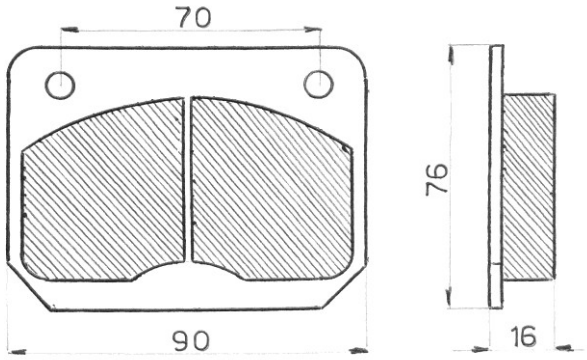

Ebac Code	Original Code	Brand	Description
BH0001	BFM6021	Dieci	Mixer - Telescopic Handler ET.HV
	300.008.008	Silla	Mixer
		Lugli	Fork Lift

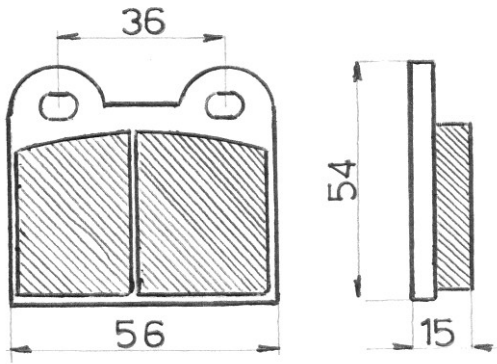

BH0002	2852000209	Fiori	Dumper - Mixer
	300.007.007	Silla	Mixer

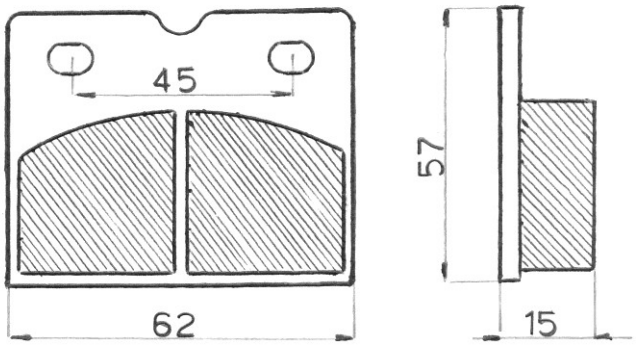

BH0003	BFM6210	Dieci	Mixer - Dumper
	2852000109	Fiori	Mixer - Dumper
	V0318	Silla	Mixer - Dumper
		Lugli	Fork Lift
		Junghenrich	Fork Lift

www.ebacparts.com - info@ebacparts.com - tel/fax +390522917720 P. Iva IT 02481240352
Ricambi EBAC Via M. Buonarroti N° 11 - 42023 - Cadelbosco Sopra - Reggio Emilia - ITALY

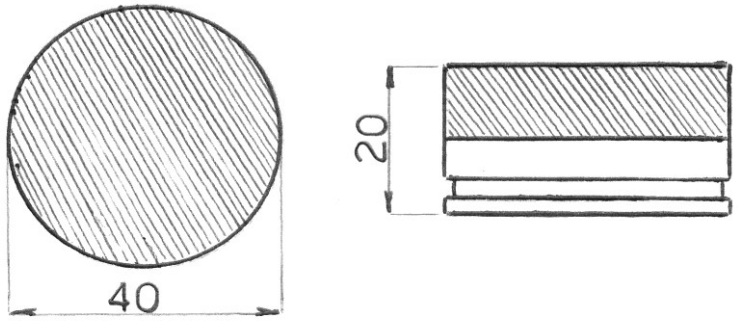

Ebac Code	Original Code	Brand	Description
BH0004	.001076AA	Merlo	Mixer DBM Parking
	BFM6001	Dieci	Mixer - Telescopic Handler ET.HV
	2852000451	Fiori	Mixer - Dumper
	200.006.014	Silla	Mixer - Dumper 300.006.014

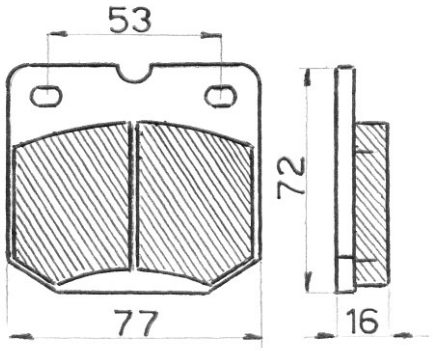

BH0005		Lugli	Fork Lift

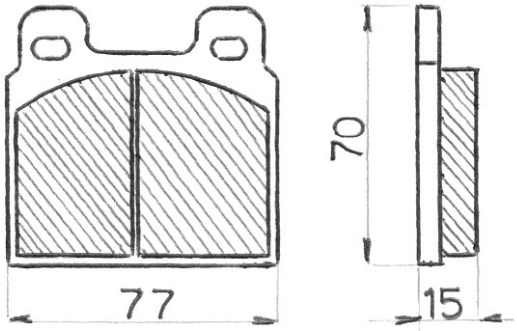

BH0006		Laverda	Combinate Harvester
		Benfra	Brake
		Benati	Brake
			02 pag 07

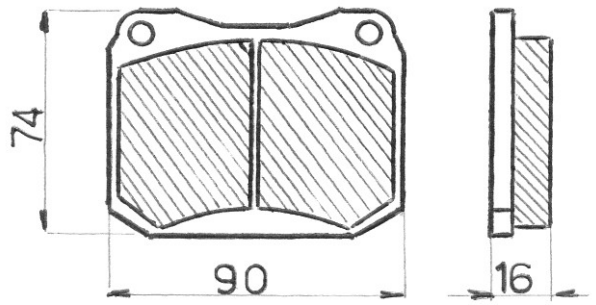

Ebac Code	Original Code	Brand	Description
BH0007		Laverda	Combinate Harvester
		Benati	Brake
		Benfra	Brake

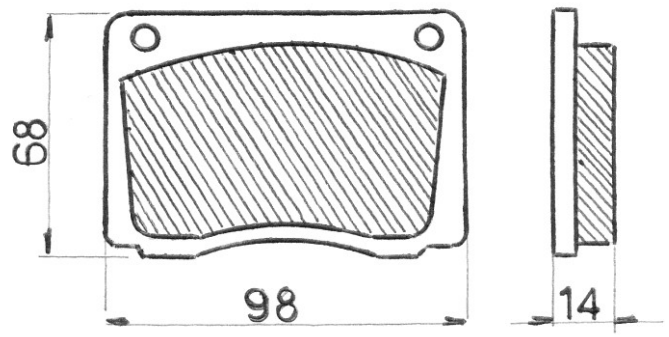

BH0008		Bendini	Mobilcrane
		Benati	Brake
		Benfra	Brake

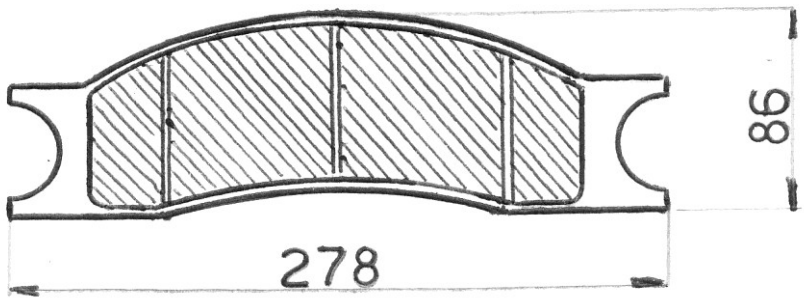

BH0009		Terex	Brake
		JCB	Brake
		Case CNH	Brake
		Komatsu	Brake
		CAT	Brake

www.ebacparts.com - info@ebacparts.com - tel/fax +390522917720 P. Iva IT 02481240352
Ricambi EBAC Via M. Buonarroti N° 11 - 42023 - Cadelbosco Sopra - Reggio Emilia - ITALY

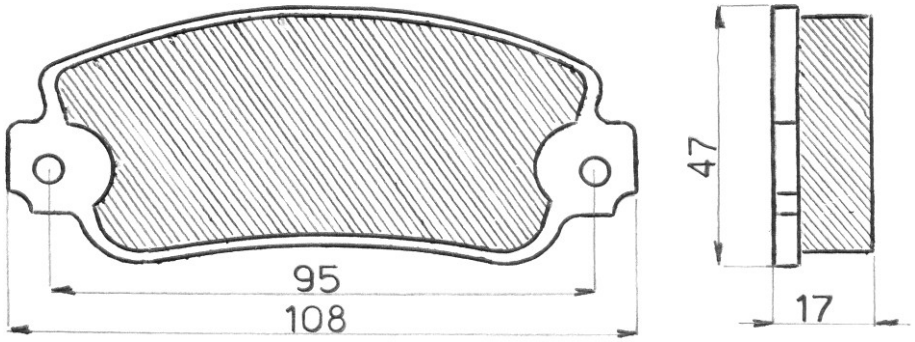

Ebac Code	Original Code	Brand	Description
BH0010	.046917-025964-044822	Merlo	Mixer DBM HY- Telescopic Handler

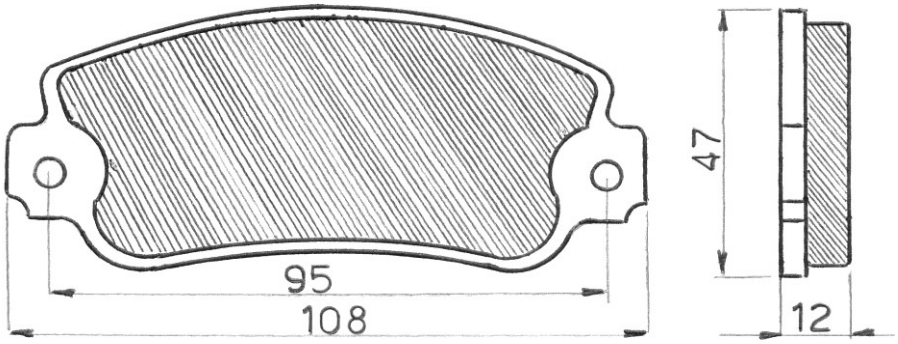

BH0011	.049614-044823-035498	Merlo	Mixer DBM HY- Telescopic Handler
	.042194-042995		

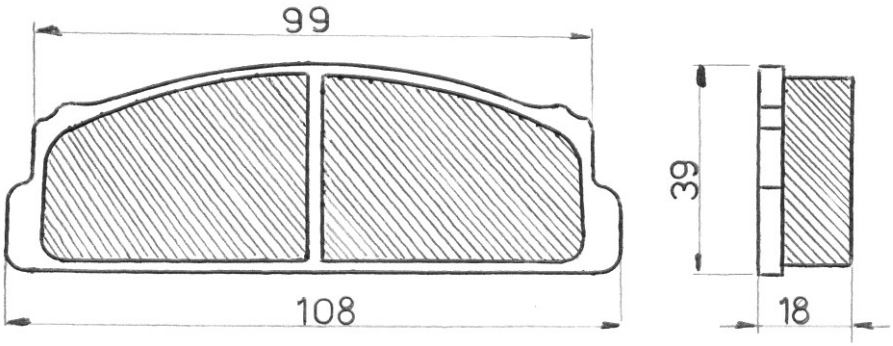

BH0012	.013360	Merlo	Mixer DBM Mech. - Dumpers
			02 pag 09

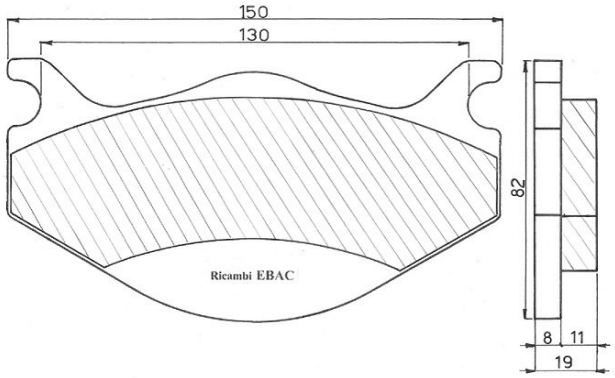

Ebac Code	Original Code	Brand	Description
BH0014	.061724	Merlo	Telescopic Handler

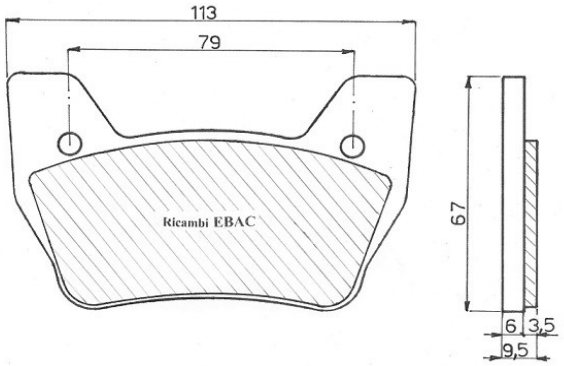

BH0015	.063782	Merlo	Telescopic Handler

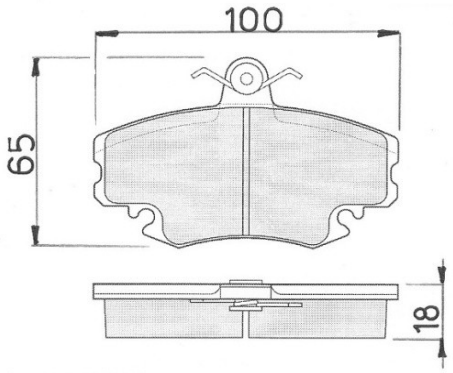

BH0016		Sambron	Forklift - Dumpers - Telescopic Handler
			02 pag 09.1

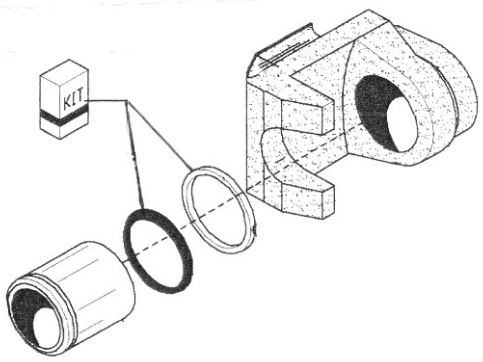

Ebac Code	Original Code	Brand	Description
BI5001	.013525AA	Merlo	Mixer DBM - Telescopic Handler
BI5002	.047728	Merlo	Mixer DBM - Telescopic Handler
BI5003	.062527	Merlo	Mixer DBM - Telescopic Handler
BI5020	.043347	Merlo	Mixer DBM - Telescopic Handler

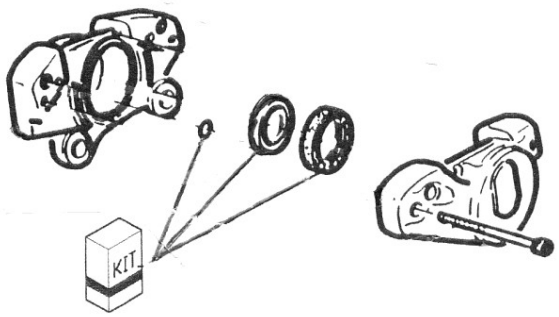

BI5004	BFM6238	Dieci	Dumper 38
BI5005	BFM6211	Dieci	Dumper - Mixer 48
BI5006	BFM6024	Dieci	Mixer - Telescopic Handler ET.HV 60

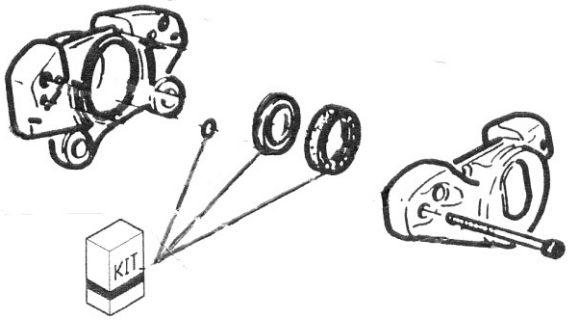

BI5007	2852100200	Fiori	Dumper - Mixer 38
BI5008	2852100100	Fiori	Dumper - Mixer 48
BI5009	V38	Silla	Dumper
BI5010	V48	Silla	Dumper - Mixer
BI5011	V60	Silla	Dumper - Mixer

www.ebacparts.com - info@ebacparts.com - tel/fax +390522917720 P. Iva IT 02481240352
Ricambi EBAC Via M. Buonarroti N° 11 - 42023 - Cadelbosco Sopra - Reggio Emilia - ITALY

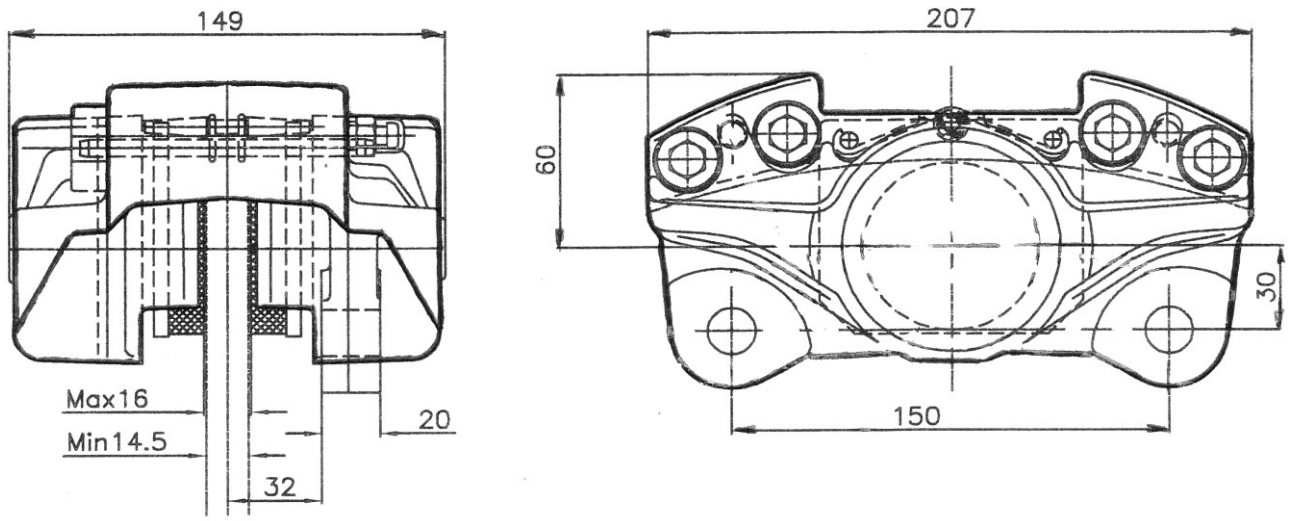

Ebac Code	Original Code	Brand	Description
BI0001	BFM2002 - BFM2006	Dieci	Mixer PD - Telescopic Handler ET.HV
		Silla	Mixer
		Benati	Brake

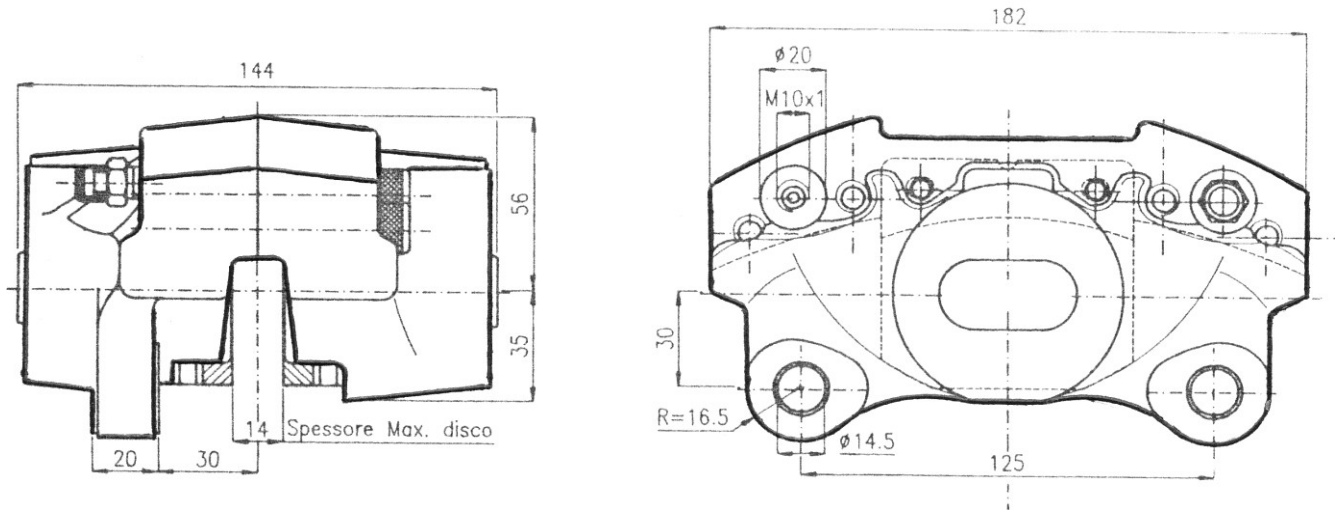

BI0002		Lugli	Fork Lift
		Venieri	
			02 pag 11

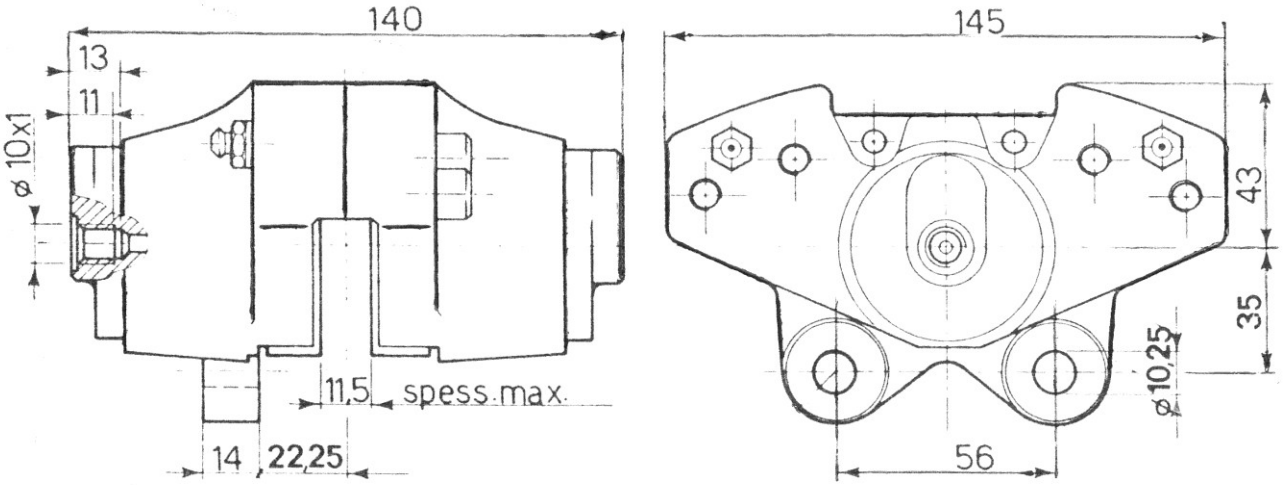

Ebac Code	Original Code	Brand	Description
BI0003	2852000350	Fiori	Dumper - Mixer
	BFM2038	Dieci	Dumper
		Silla	Dumper - Mixer
		PGS	Fork Lift

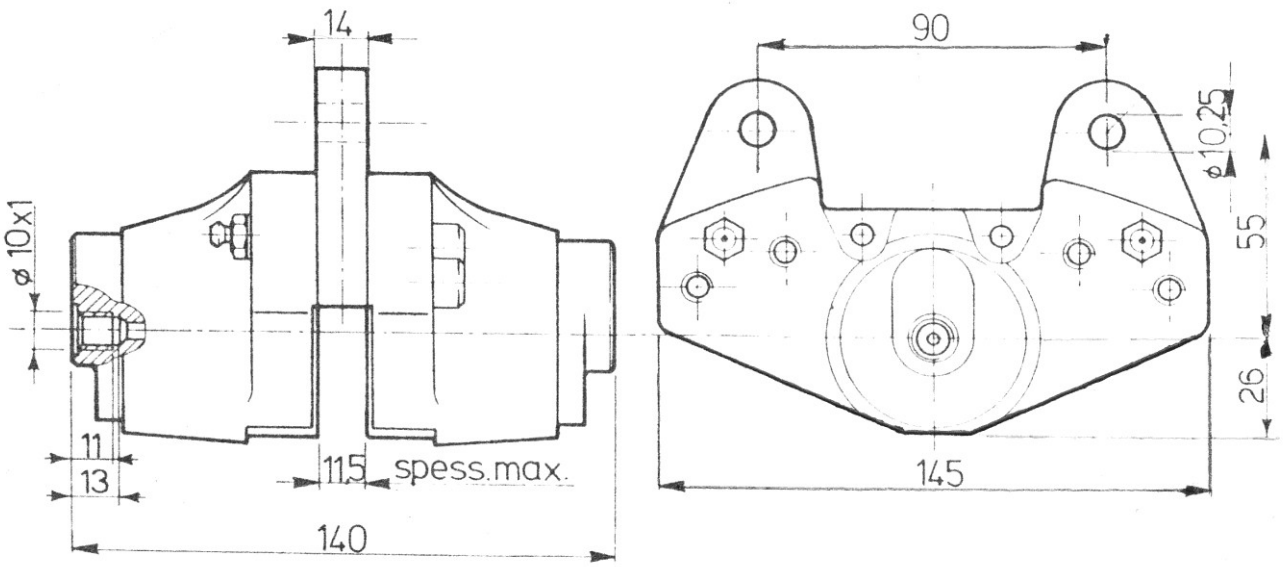

BI0004		Lugli	Fork Lift
			02 pag 12

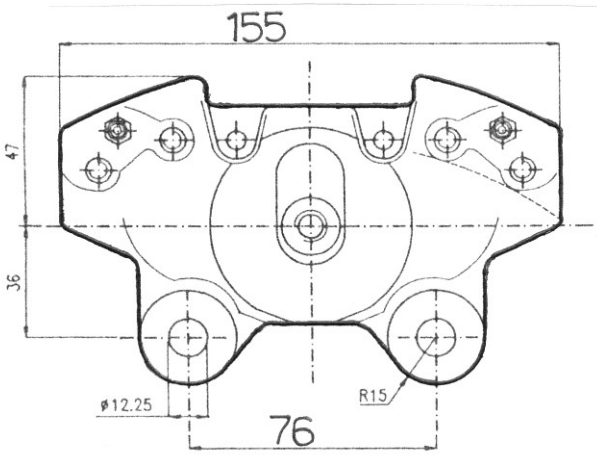

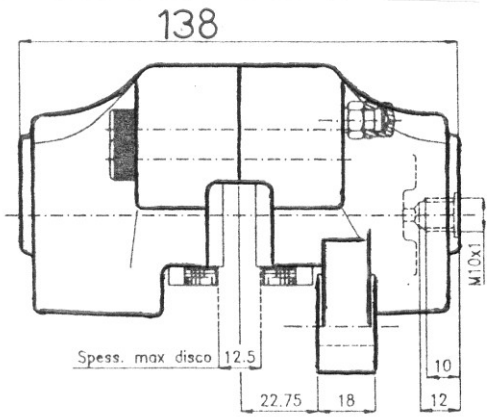

Ebac Code	Original Code	Brand	Description
BI0006	BFM2008	Dieci	Mixer
	2852000100	Fiori	Dumper - Mixer
		Silla	Dumper - Mixer

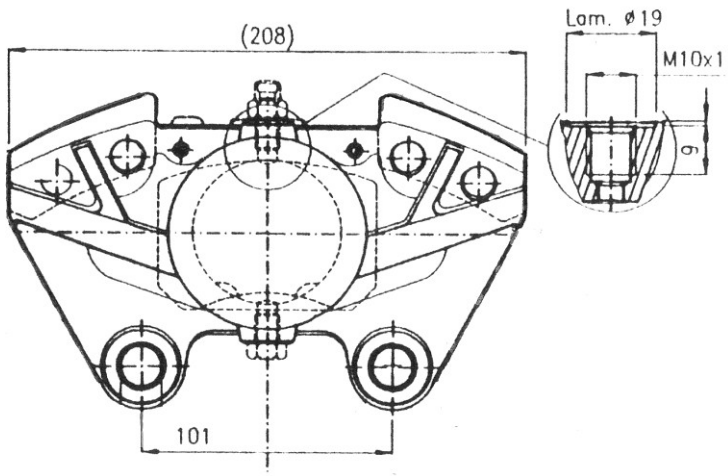

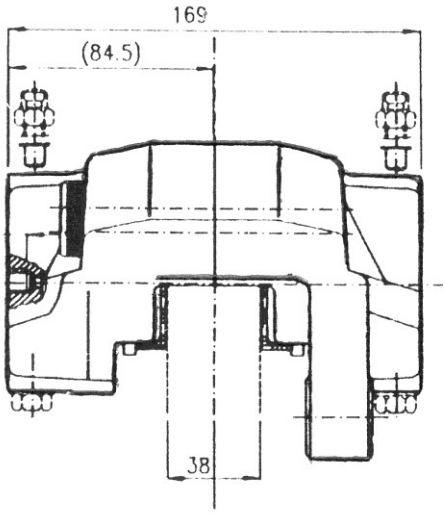

BI0010		Stilmec	All Applications
			02 pag 13

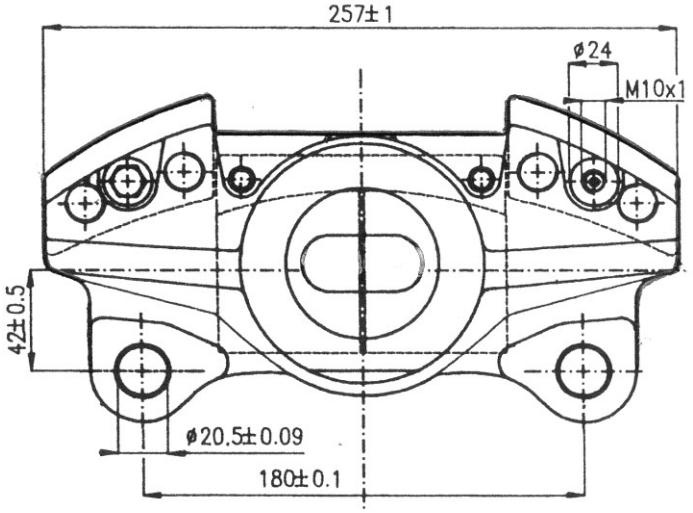

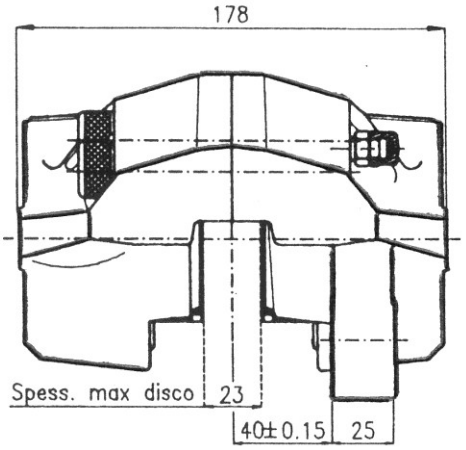

Ebac Code	Original Code	Brand	Description
BI0011		Benati	Brake

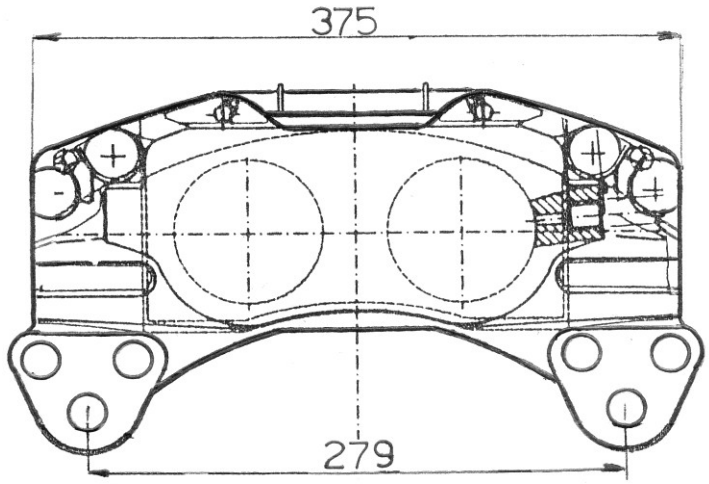

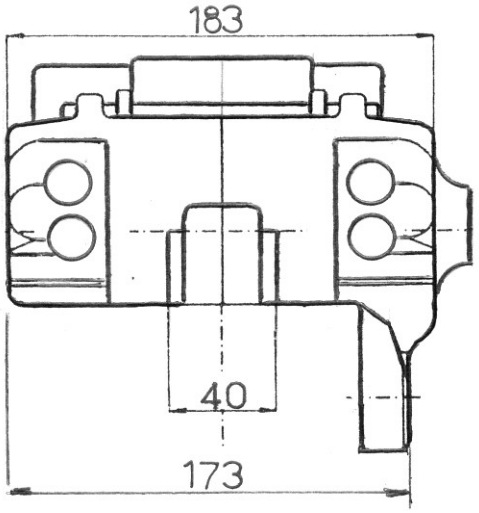

BI0012	7226953	Terex	Mixer (Italmacchine)
			02 pag 14

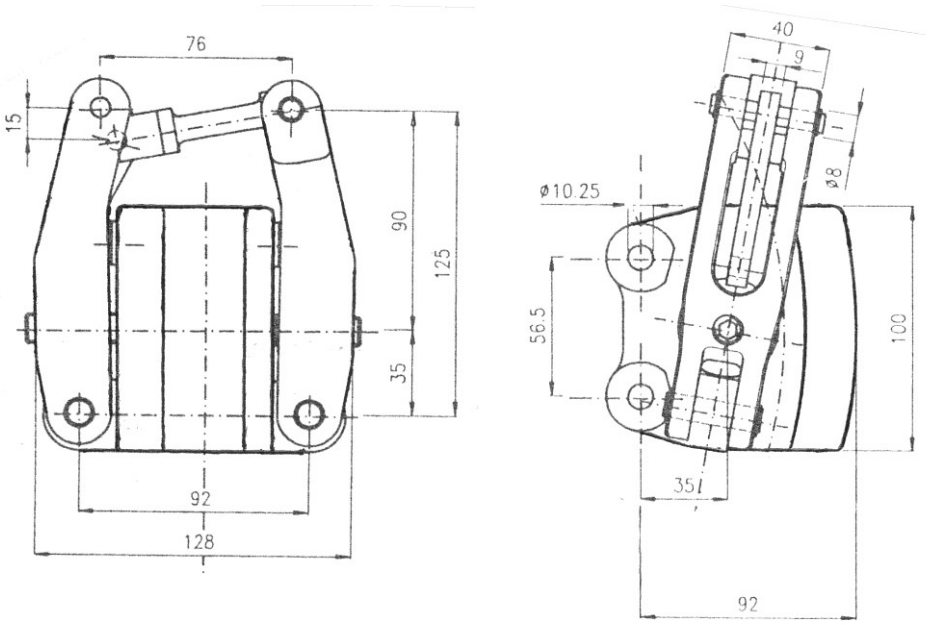

Ebac Code	Original Code	Brand	Description
BI0019	.011937AA	Merlo	Mixer DBM OT- Dumper - Telescopic OT- Parking
	BFM2001	Dieci	Mixer - Telescopic ET.HV
	2852000450	Fiori	Mixer
		Silla	Mixer - Dumper
		Dumec	Dumper

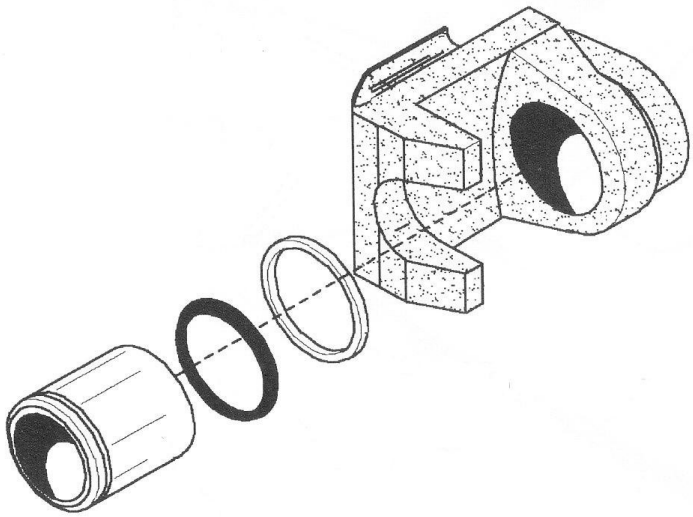

BI0025	.034557	Merlo	Telescopichandler - Mixer
BI0026	.047144	Merlo	Telescopichandler - Mixer
BI0027	.047143	Merlo	Telescopichandler - Mixer
			02 pag 15

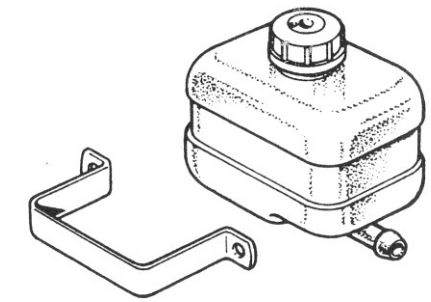

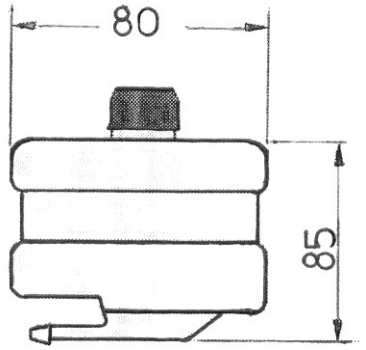

Ebac Code	Original Code	Brand	Description
BC0001			All Applications

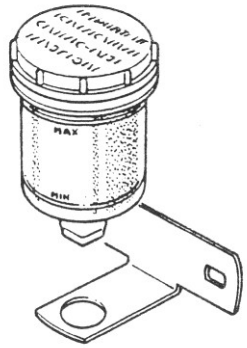

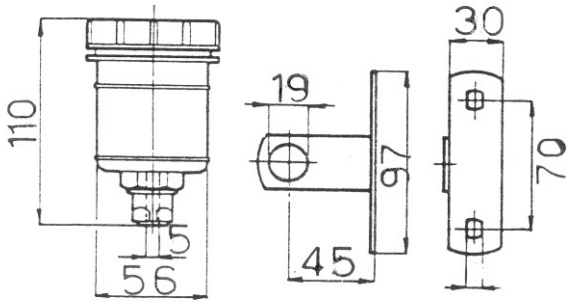

BC0003			All Applications

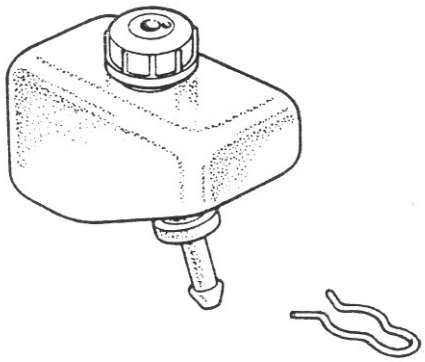

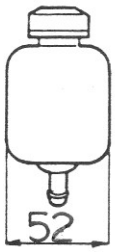

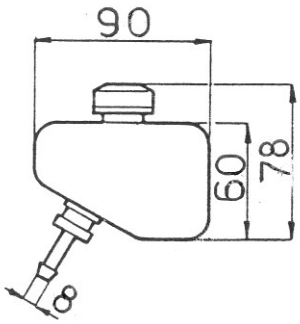

BC0004			All Applications
			02 pag 16

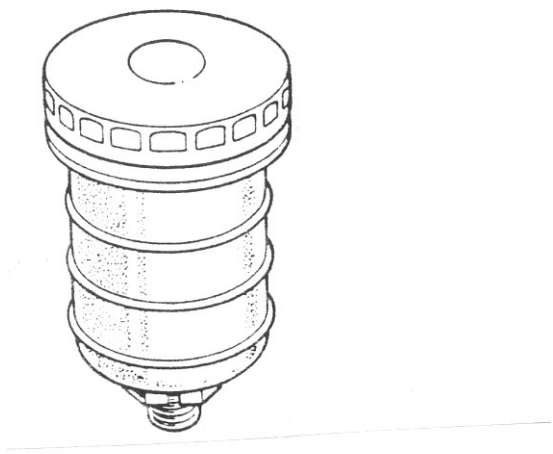

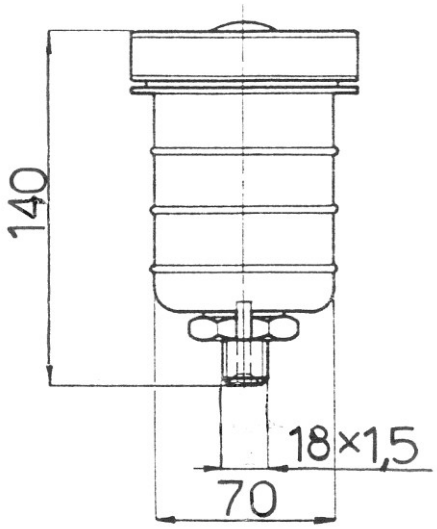

Ebac Code	Original Code	Brand	Description
BC0006			All Applications

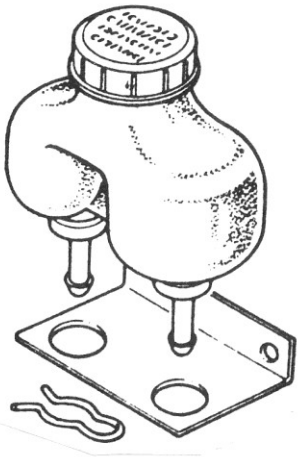

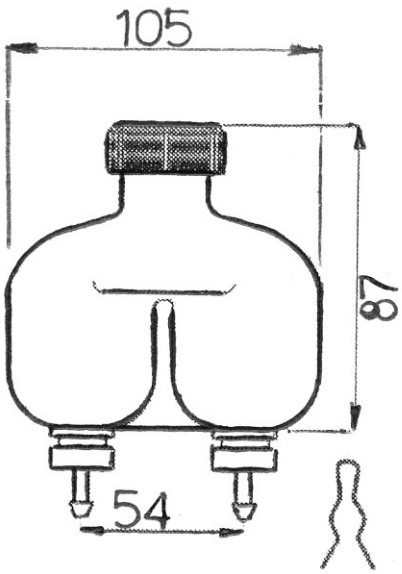

BC0002		Merlo	All Applications
		Dieci	
		Fiori	
		Terex	
			02 pag 17

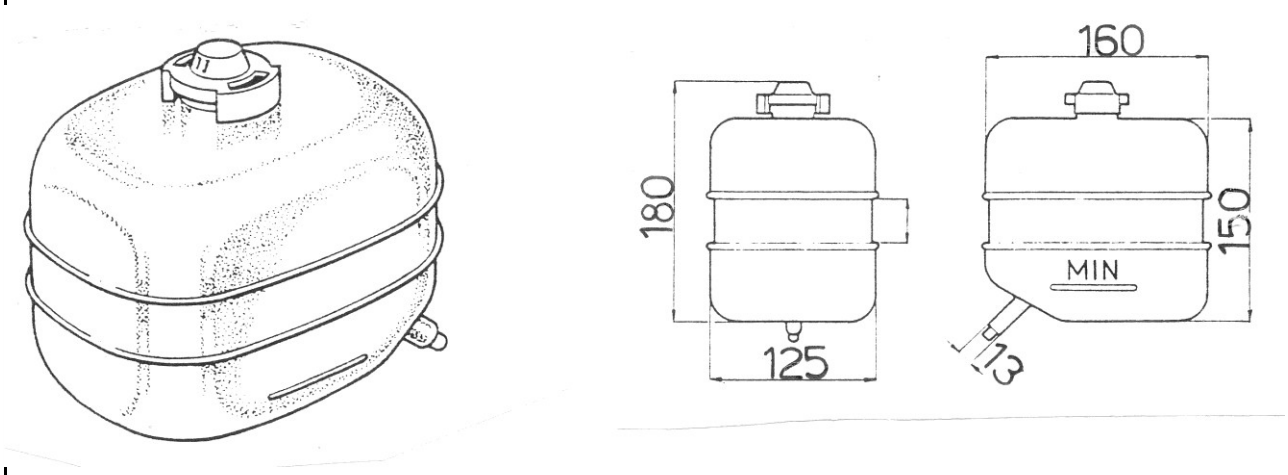

Ebac Code	Original Code	Brand	Description
BC0005			All Applications

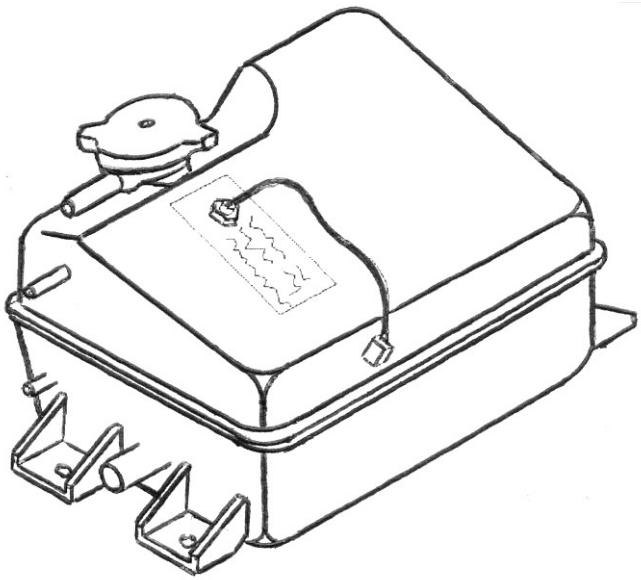

BC0007	.011314AA	Merlo	Mixer - Telescopic Handler Hydr. Oil
			02 pag 18

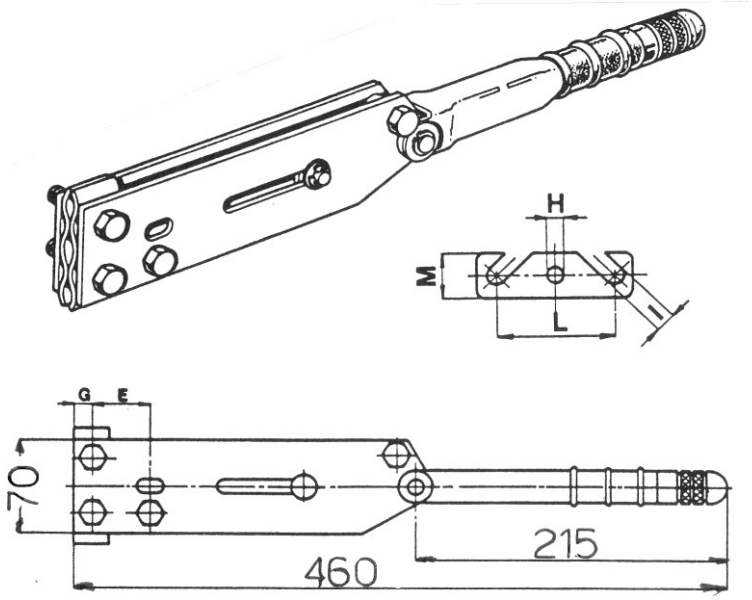

Ebac Code	Original Code	Brand	Description
BD0003	BFG4103	Dieci	Mixer - telescopic Handler - Dumper
	3000.01.00	Dumec	Dumper - Mixer
			Fork Lift - All Applications

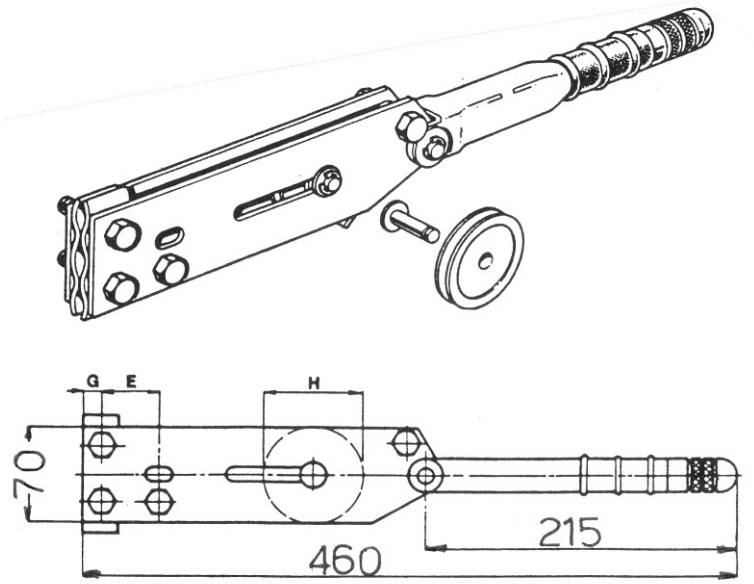

BD0004	BFG4109	Dieci	Telescopic Handler
	.009812AA	Merlo	Mixer DBM
	4980000002	Fiori	Mixer
			Fork Lift - All Applications
			02 pag 19

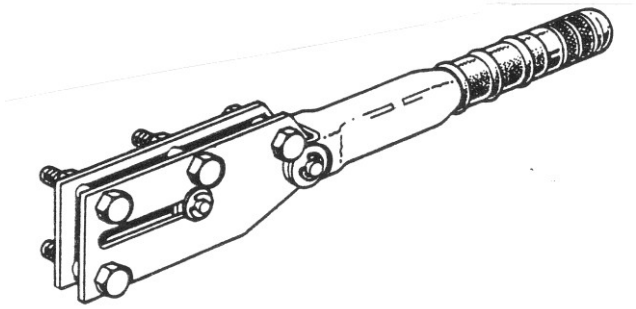

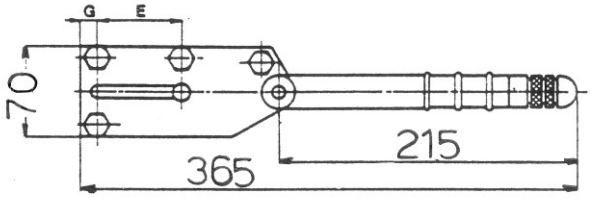

Ebac Code	Original Code	Brand	Description
BD0005			Dumper - All Applications
			Fork Lift - All Applications

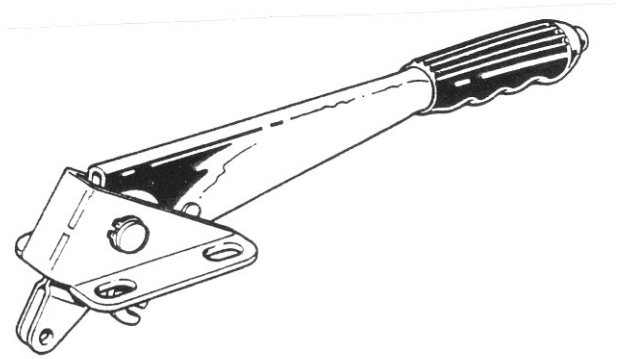

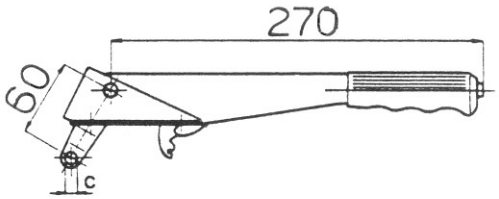

BD0006	BFG4101	Dieci	Dumper
	4980000001	Fiori	Mixer - Dumper
	.025794	Merlo	Telescopic Handler Pan.
	634740	Italmacch.	Mixer - Dumper
			All Applications
			02 pag 20