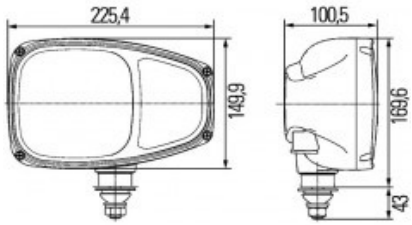

Ebac Code	Original Code	Brand	Description
AD0021 RH / DX		Manitou	Telescopic Handler
AD0022 LH / SX		Manitou	Telescopic Handler

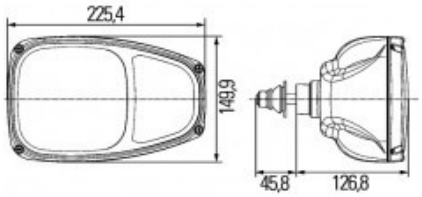

AD0023 RH / DX		Manitou	Telescopic Handler
AD0024 LH / SX		Manitou	Telescopic Handler

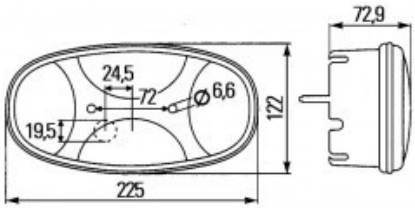

AD3018 RH / DX		Manitou	Telescopic Handler
AD3019 LH / SX		Manitou	Telescopic Handler
			05 pag 00

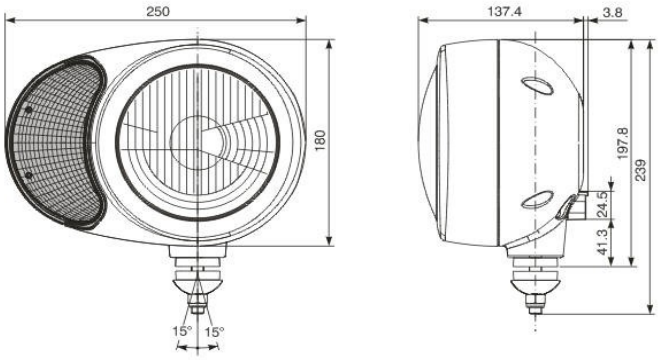

Ebac Code		Original Code	Brand	Description
AD0001	Dx			All Applications
AD0002	Sx			All Applications

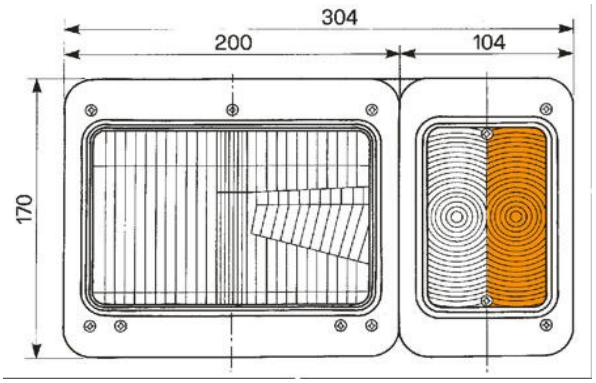

AD0016	Dx			All Applications
AD0017	Sx			All Applications

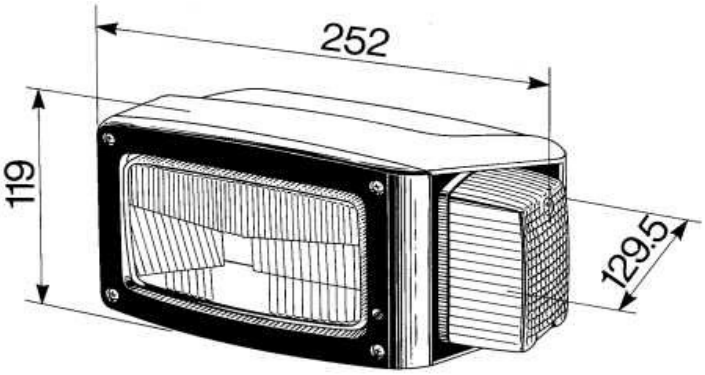

AD0003	Dx	.042814	Merlo	Telescopic Handler	All Applications
AD0004	Sx	.042815	Merlo	Telescopic Handler	All Applications
					05 pag 01

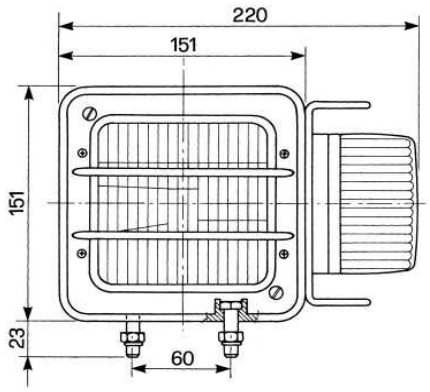

Ebac Code		Original Code	Brand	Description	
AD0005	Dx	BEM2014	Dieci	Mixer	All Applications
		.037028	Merlo	Telescopic Handler	
AD0006	Sx	BEM2015	Dieci	Mixer	
		.037027	Merlo	Telescopic Handler	

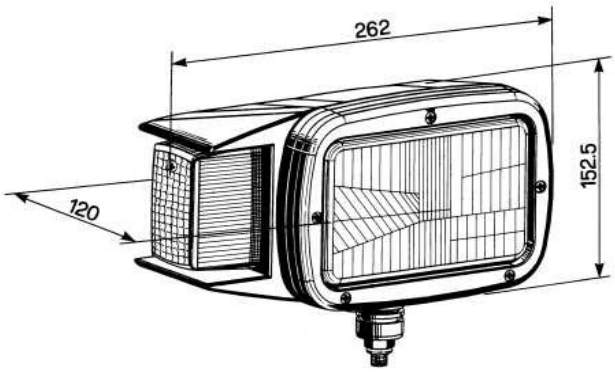

AD0007	Dx			All Applications
AD0008	Sx			All Applications

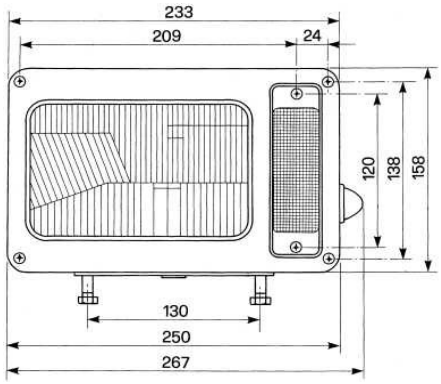

AD0009	Dx			All Applications
AD0010	Sx			All Applications
				05 pag 02

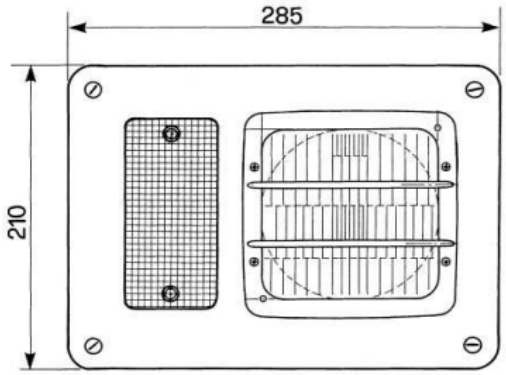

Ebac Code	Original Code	Brand	Description
AD0011 Dx			All Applications
AD0012 Sx			All Applications

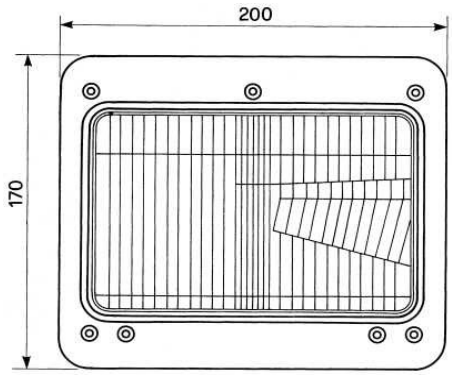

AD0013			All Applications

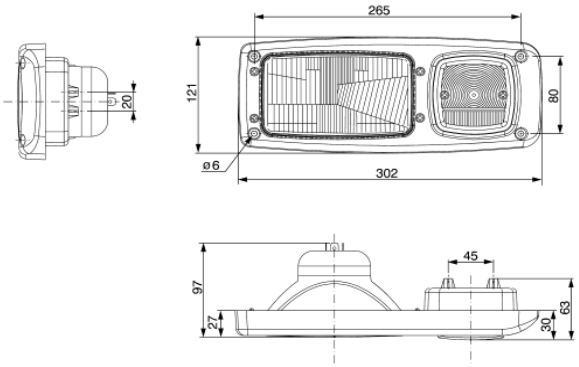

AD0014 Dx			All Applications
AD0015 Sx			All Applications
			05 pag 03

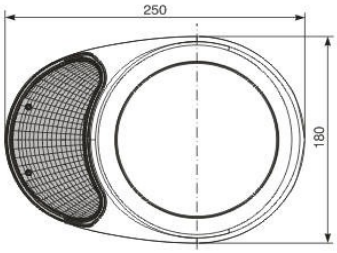

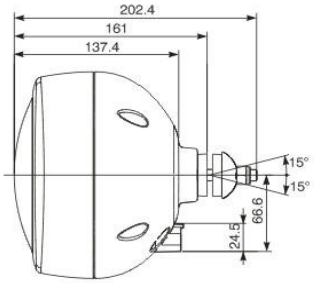

Ebac Code	Original Code	Brand	Description
AD0018		Dieci	Telescopic Handler

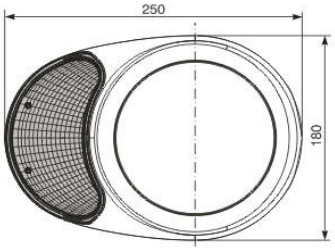

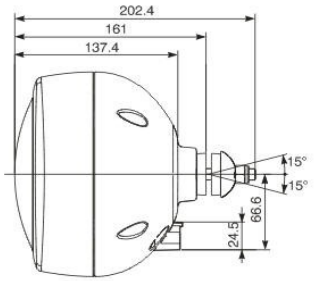

AD0019		Dieci	Telescopic Handler

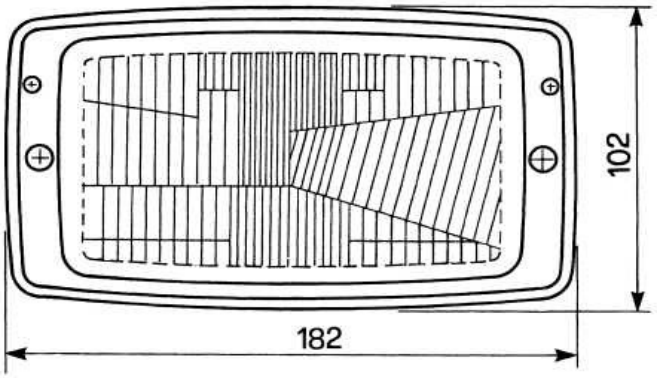

AD0020		Manitou	Telescopic Handler
			05 pag 04

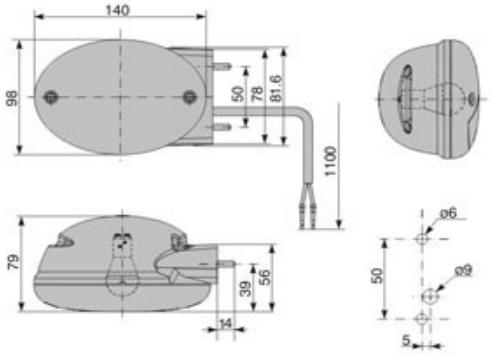

Ebac Code		Original Code	Brand	Description
AD2001	Dx			All Applications
AD2002	Sx			All Applications

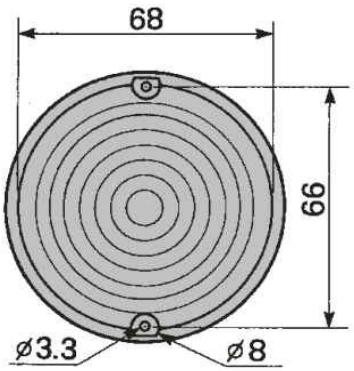

AD2003				All Applications

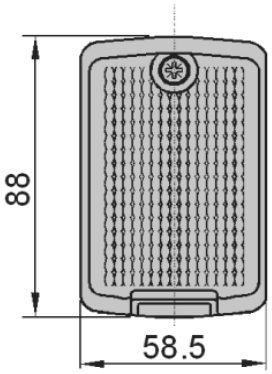

AD2004	Dx			All Applications
AD2005	Sx			All Applications
				05 pag 05

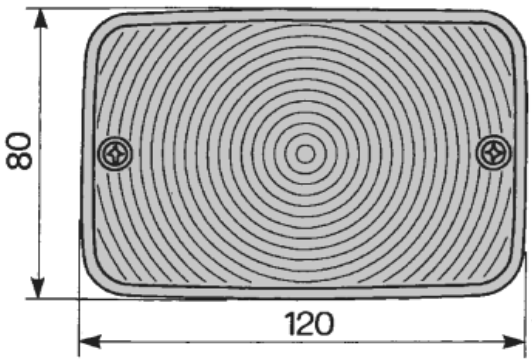

Ebac Code		Original Code	Brand	Description
AD3001	Dx			All Applications
AD3002	Sx			All Applications

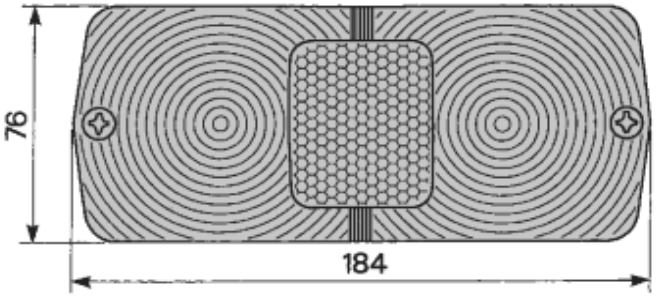

AD3003	Dx			All Applications
AD3004	Sx			All Applications

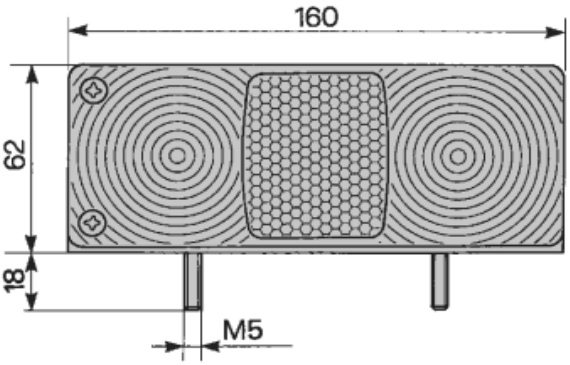

AD3005	Dx	.027531	Merlo	Mixer - Telescopic Handler
AD3006	Sx	.027532	Merlo	Mixer - Telescopic Handler
				All Applications
				05 pag 06

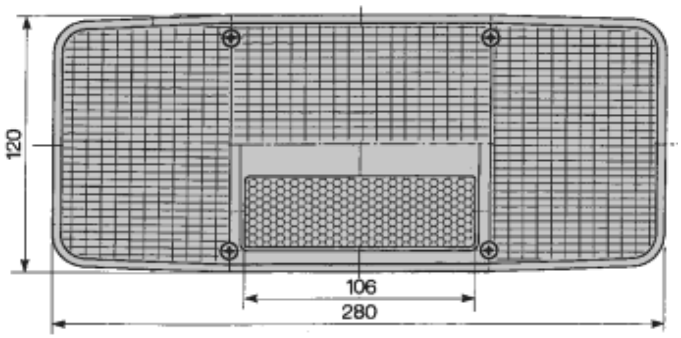

Ebac Code		Original Code	Brand	Description
AD3007	Dx			All Applications
AD3008	Sx			All Applications

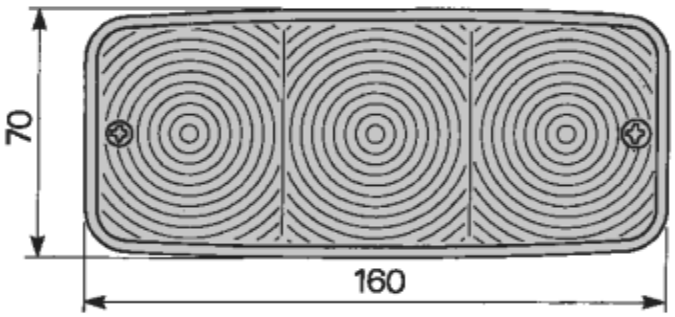

AD3009	Dx			All Applications
AD3010	Sx			All Applications

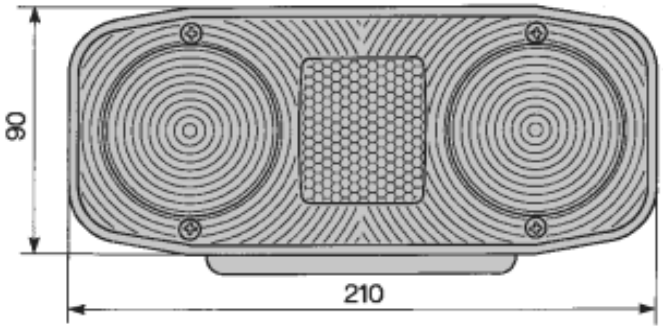

AD3011	Dx			All Applications
AD3012	Sx			All Applications
				05 pag 07

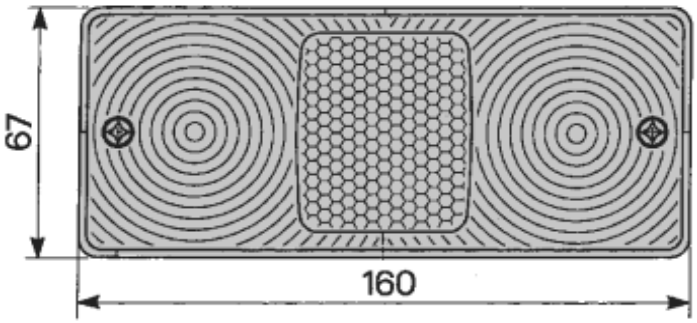

Ebac Code	Original Code	Brand	Description
AD3013	.035578 - 028359	Merlo	Mixer - Telescopic Handler

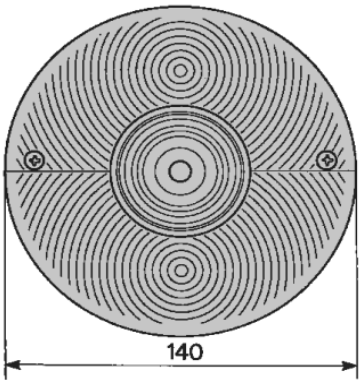

AD3014			All Applications

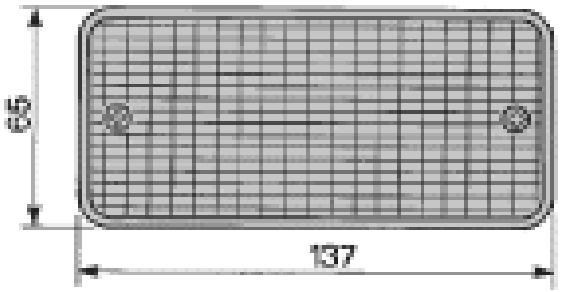

AD3015	.026788	Merlo	Mixer - Telescopic Handler
			05 pag 08

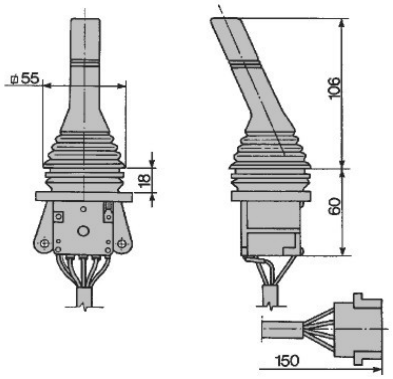

Ebac Code	Original Code	Brand	Description
AC0001 F-R S-F			Forward - Reverse / Motion shifter L - H
			All Applications Panel board

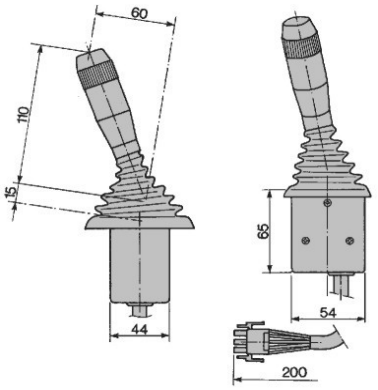

AC0002	BEN2009	Dieci	Light control - Direction light device - Horn
			All Applications Panel board
AC0052	9410091002	Fiori	Light control - Direction light device

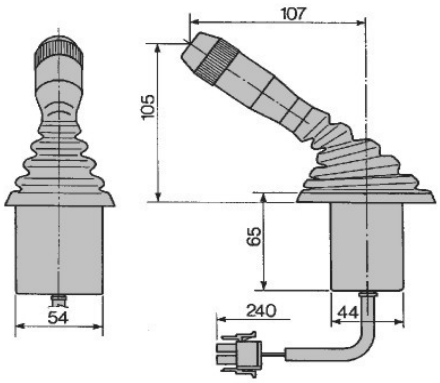

AC0003 F-R / S-F	BEN2000	Dieci	Forward - Reverse / Slow - Fast O - I
			All Application Panel board
AC0051 F-R / S-F	9410091003	Fiori	Forward - Reverse / Slow - Fast O - I
			05 pag 09

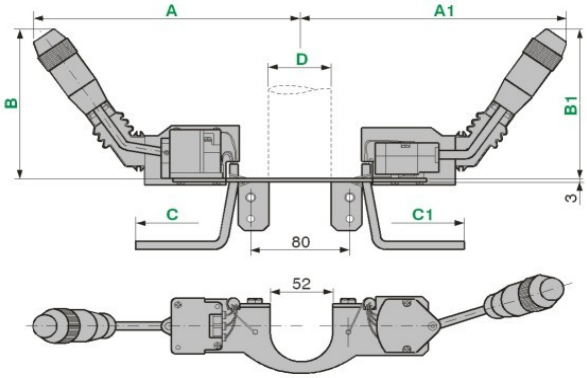

Ebac Code	Original Code	Brand	Description
AC0004			Light control switch Steering column
			All Applications

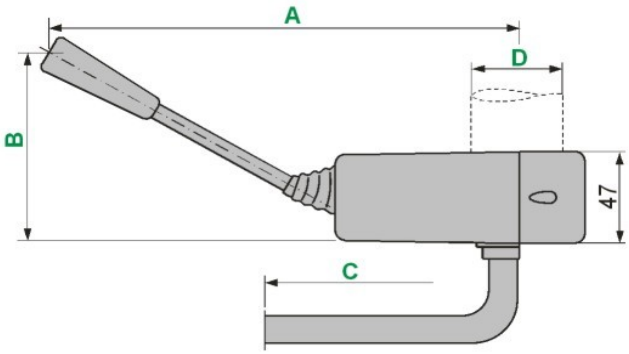

AC0005 F-R S-F			Forward - Reverse Steering column
			All Applications

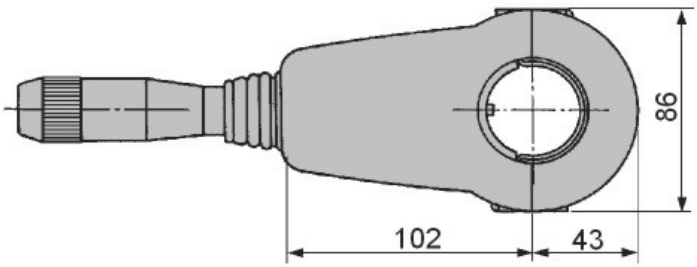

AC0006 F-R S-F - L			Forward - Revers - Light Steering column
			All Applications
			05 pag 10

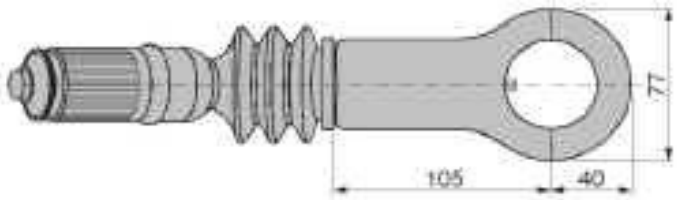

Ebac Code	Original Code	Brand	Description
AC0007 F-N-R S-F			Forward - Neutral - Reverse - Speed drive I - II
	4C.116107	Dieci	Telescopic Handler
		Faresin	

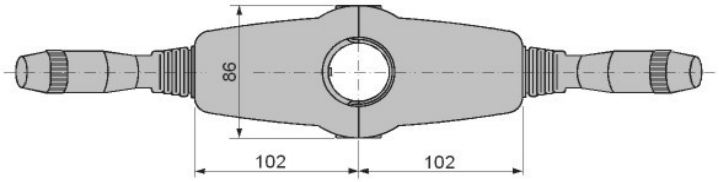

AC0009			Forward - Reverse / Light control Steer. Column
			All Applications

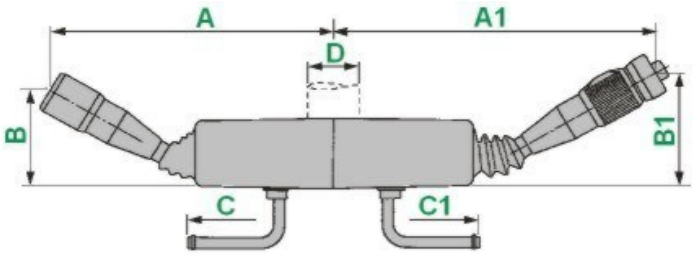

AC0010 F-N-R S-F	.035367	Merlo	Forward - Neutral - Reverse / Speed device
			Light control - Direction light -
			05 pag 11

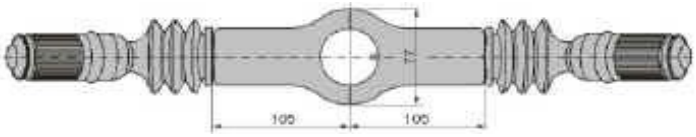

Ebac Code	Original Code	Brand	Description
AC0011		Dieci	Forward - Neutral - Reverse - Speed drive / Light
		Manitou	Steering Column All Applications
		Faresin	

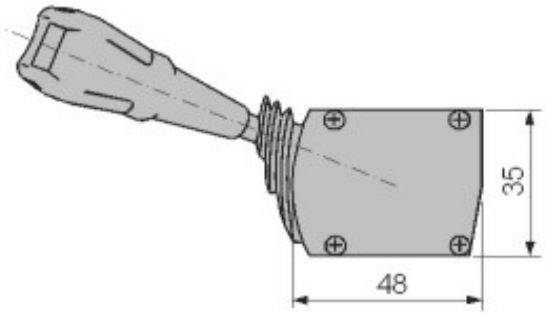

AC0012 F-R			Forward - Reverse Panel board
			All Applications

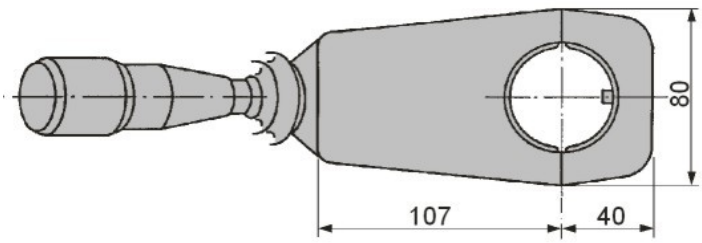

AC0013	.037847	Merlo	Forward - Neutral - Reverse Steer. Column
AC0014	.037848 - 04015	Merlo	Light control Steer. Column
		Ausa	All Applications
			05 pag 12

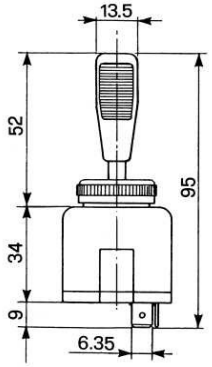

Ebac Code	Original Code	Brand	Description
AF0005	BEN2003	Dieci	Mixer
			All Applications

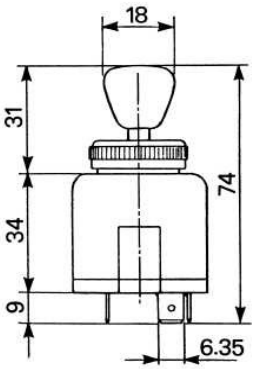

AF0006			All Applications

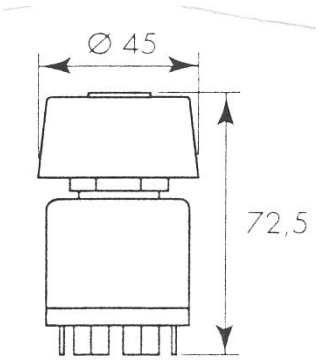

AF0007	BEN1003	Dieci	Mixer
	.025929	Merlo	Mixer
			All Applications
			05 pag 13

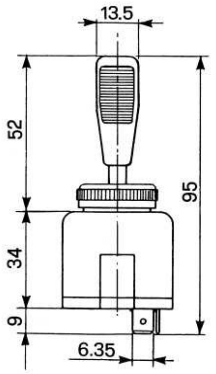

Ebac Code	Original Code	Brand	Description
AF0008		Dumec	All Application
		Silla	

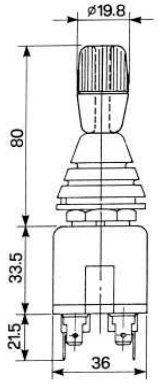

AF0009		Merlo	Mixer
			All Applications

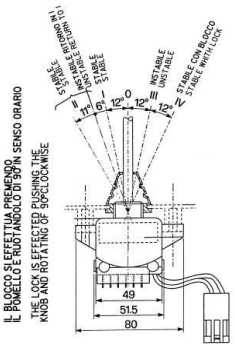

AF0010			All Applications
			05 pag 14

RICAMBI **EBAC**	**DEVIOGUIDA**	**Handler Device**

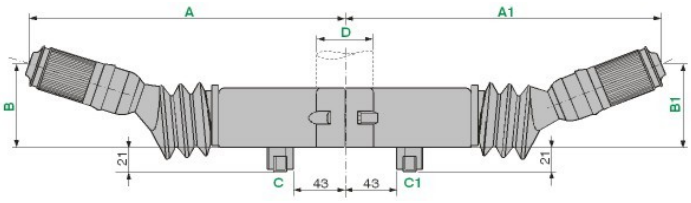

Ebac Code	Original Code	Brand	Description
AC0018	4C.116086	Dieci	Telehandler

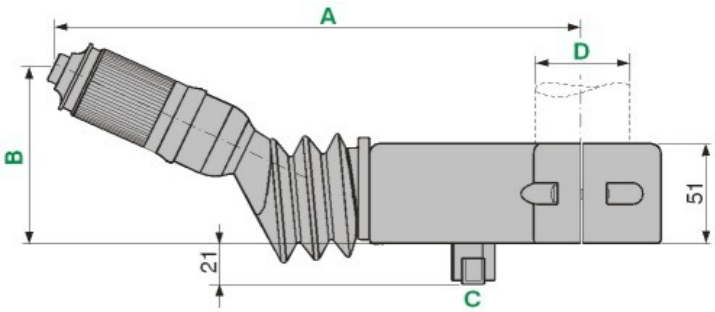

AC0019	4C.116092	Dieci	Telehandler Agri F-N-R 4 Speed
AC0022	4C.116073	Dieci	Telehandler F-N-R
AC0023	4C.116074	Dieci	Telehandler F-N-R
AC0007	4C.116107	Dieci	Telehandler F-N-R I - II Speed

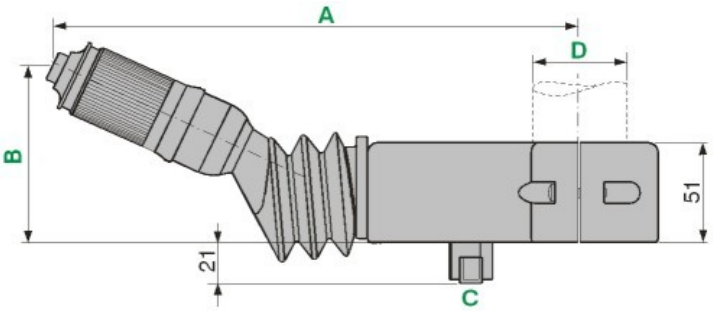

AC0020	4C.116088	Dieci	Telehandler Light Device
AC0021	4C.116072	Dieci	Telehandler Light Device